STANDARD ABBREVIATIONS

A/C: AIR CONDITIONER
ACI: AMERICAN CONCRETE INSTITUTE
ADA: AMERICANS WITH DISABILITIES ACT
A.F.F.: ABOVE FINISHED FLOOR
A.F.G.: ABOVE FINISHED GRADE
AIA: AMERICAN INSTITUTE OF ARCHITECTS
AIEE: AMERICAN INSTITUTE OF ELECTRICAL ENGINEERS
AISC: AMERICAN INSTITUTE OF STEEL CONSTRUCTION
AISI: AMERICAN AND STEEL INSITITUTE
ANSI: AMERICAN NATIONAL STANDARDS INSITUTE
ASCE: AMERICAN SOCIETY OF CIVIL ENGINEERS
ASME: AMERICAN SOCIETY OF MECHANICAL ENGINEERS
ASTM: AMERICAN SOCIETY FOR TESTING AND MATERIALS
AWG: AMERICAN WIRE GAUGE
BD.: BOARD
B.O.F.: BOTTOM OF FOOTING
BOT: BOTTOM
B.O.W.: BOTTOM OF WALL
CAD: COMPUTER-AIDED DRAFTING
C.D.: CONSTRUCTION DOCUMENT
C.F.M.: CUBIC FEET PER MINUTE
CFS: CUBIC FEET PER SECOND
C.I.: CAST IRON
CL: CENTER LINE
CLG.: CEILING
CMU: CONCRETE MASONRY UNIT
C.O.: CLEANOUT
CONT.: CONTINUOUS
CU. FT.: CUBIC FEET
CU. YD.: CUBIC YARD
D.S.: DOWNSPOUT
DIA.: DIAMETER
DIM.: DIMENSION
DN.: DOWN
DP: DAMP-PROOFING, OR DISTRIBUTION PANEL
DWG: DRAWING
EA.: EACH
E.F.: EXHAUST FAN
EQ: EQUAL
EXC: EXCAVATE
E.W.: EACH WAY
EXT.: EXTERIOR
FACP: FIRE ALARM CONTROL PANEL
FAO: FINISH ALL OVER
F.C.O.: FLOOR CLEANOUT
F.D.: FLOOR DRAIN
FIN.: FINISH
F.F.L.: FINISHED FLOOR LEVEL
FL: FLOOR LEVEL
FRPF: FIREPROOF
FTG: FITTING
GALV.: GALVANIZED
G.C.: GENERAL CONTRACTOR
G.F.C.I. OR G.F.I.: GROUND-FAULT CIRCUIT-INTERRUPTER
GPM: GALLONS PER MINUTE
GYP.: GYPSUM
H.B.: HOSE BIB
HDPE: HIGH-DENSITY POLYETHYLENE
HV: HIGH VOLTAGE
H.V.A.C.: HEATING, VENTILATION, AND AIR CONDITIONING
H.W.: HOT WATER
IAW: IN ACCORDANCE WITH
ID: INNER DIAMETER
IE: INVERT ELEVATION
IN.: INCH
INS.: INSULATION
ISO: INTERNATIONAL ORGANIZATION FOR STANDARDS
INT.: INTERIOR
INV.: INVERT
J-BOX: JUNCTION BOX
JCT.: JUNCTION
JST.: JOIST
KW: KILOWATT
LF.: LINEAR FEET
LH: LEFT HAND
LL: LIVE LOAD
LT.: LIGHT
LTG.: LIGHTING
L.V.L.: LAMINATED VENEER LUMBER
MH: MANHOLE
MAS.: MASONRY
MAX: MAXIUMUM
MTL.: MATERIAL
MFG.: MANUFACTURING
MFR.: MANUFACTURER
MIN.: MINIMUM
NEC: NATIONAL ELECTRICAL CODE
N.I.C.: NOT IN CONTRACT
NOM: NOMINAL
N.T.S.: NOT TO SCALE
O.C.: ON CENTER
O.D.: OUTSIDE DIAMETER
OPNG.: OPENING OR ROUGH OPENING
OPP.: OPPOSITE
PCS: PIECES
PL.: PLASTER
P.L.: PROPERTY LINE
PLYWD.: PLYWOOD
P.S.F.: POUNDS PER SQUARE FOOT
P.S.I.: POUNDS PER SQUARE INCH
PTD.: PAINTED
PVC: POLYVINYL CHLORIDE
QTY: QUANTITY
R: RADIUS
RC: REINFORCED CONCRETE
RD: ROOF DRAIN
R.D.L.: ROOF DRAIN LEADER
REBAR: REINFORCING BAR
REQD: REQUIRED
RH: RIGHT HAND
R.O.: ROUGH OPENING
R.O.W.: RIGHT OF WAY
REINF.: REINFORCED
SAN.: SANITARY
S.D.: SMOKE DETECTOR
SECT.: SECTION
SHT.: SHEET
SHT'G.: SHEATHING
SPECS.: SPECIFICATIONS
SQ. FT.: SQUARE FEET
SQ. IN.: SQUARE INCHES
SS: STAINLESS STEEL, SOLID SURFACE, OR SERVICE SINK
STD.: STANDARD
STL: STEEL
S.Y.: SQUARE YARD
T&G: TONGUE AND GROOVE
T.O.: TOP OF
T.O.B.: TOP OF BEAM
T.O.C.: TOP OF CURB OR TOP OF CONCRETE
T.O.F.: TOP OF FOOTING
T.O.J.: TOP OF JOIST
T.O.M.: TOP OF MASONRY
T.O.W.: TOP OF WALL
TTC: TELEPHONE TERMINAL CLOSET
UNO: UNLESS NOTED OTHERWISE
V.B.: VAPOR BARRIER
V.I.F.: VERIFY IN FIELD
W.C.: WATER CLOSET (TOILET)
WD.: WOOD
WDO.: WINDOW
W.I.: WROUGHT IRON
W.I.C.: WALK-IN CLOSET OR WALK-IN COOLER
W/O: WITHOUT
WP.: WEATHERPROOF
WS: WEATHERSTRIPPING OR WATER STOP
WT.: WEIGHT
WTR. HTR. : WATER HEATER

PROJECT TITLE

SNHD BEHAVIORAL HEALTH 2

SNHD

PROJECT NUMBER: 21479
278 S. DECATUR BLVD
LAS VEGAS, NV 89107

APN: 138-36-516-001

PROJECT TEAM

ARCHITECT
IZ DESIGN STUDIO
7229 W. SAHARA AVE.
STE 120
LAS VEGAS, NV 89117
PH 702.441.0026
FX 702.475.4755

MECHANINAL, PLUMBING, ELECTRICAL
IMEG
370 E WINDMILL LANE
SUITE 100
LAS VEGAS, NV 89123
PH 702.896.1100

SITE PLAN

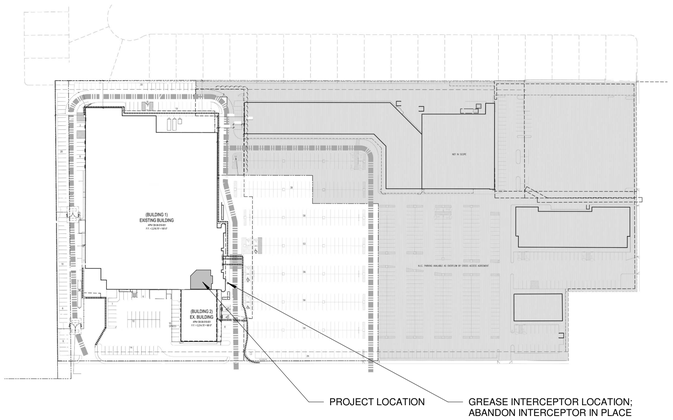

1 SITE PLAN
1" = 160'-0"

DRAWING SYMBOLS

ROOM NAME 101	ROOM NAME AND NUMBER
#	KEYNOTE
101	DOOR NUMBER
1	REVISION TAG
1 Ref / SHEET1 / Ref / Ref / 1 Ref	ELEVATION REFERENCE
# / SHEET	SECTION REFERENCE
0	GRID LINE
1' - 0"	CEILING HEIGHT
1t	WINDOW TAG
4A	WALL TAG

VICINITY MAP

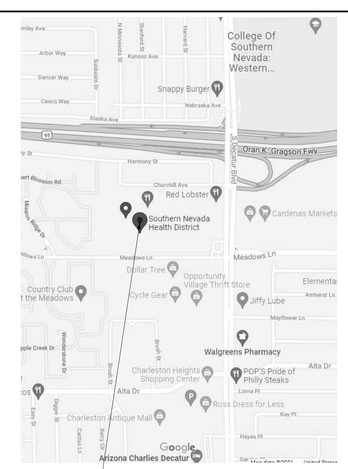

APPLICABLE CODES

- 2021 International Building Code & Amendments
- 2018 Uniform Mechanical Code & Amendments
- 2018 Uniform Plumbing Code & Amendements
- 2018 International Energy Conservation Code
- 2017 National Electrical Code & Amendements
- 2010 Americans With Disabilities Act
- 2009 ICCI/ ANSI A117.1
- 2021 International Fire Code

PROJECT DESCRIPTION

TENANT IMPROVEMENT PROJECT - DEMOLITION OF EXISTING CAFE, ABANDON INTERCPTOR AND CONSTRUCTION OF NEW WALLS AND DOORS FOR NEW OFFICE/CLINIC SPACES AND NEW MPE SYSTEM TO SUPPORT THE NEW OFFICES.

CODE ANALYSIS

(AS SUPPLEMENTED BY SOUTHERN NEVADA BUILDING OFFICIALS)

ANALYSIS ITEMS	CODE SECTION REFERENCE	REQUIREMENT	PROPOSED
1 - CODE YEAR/TYPE	2021 IBC		
2 - USE GROUP	IBC CHAPTER 3	B	B
3 - CONSTRUCTION TYPE	IBC TABLE 602	TYPE V-B	TYPE V-B
4 - FIRE SPRINKLERS	IBC TABLE 903, 903.3	YES; NFPA 13	YES; NFPA 13
5 - FIRE ALARM	IBC 907	YES	YES
6 - HEIGHT	IBC 503, 504, AND TABLE 503	55'-0"	27'-0"
7 - STORIES	IBC 503, 504, AND TABLE 503	3	1 + MEZZANINE
8 - REMODEL AREA	IBC 503, 505 THROUGH 507 AND TABLE 503	1551 SF	1551 SF
8.1- OVERALL BUILING AREA	CLV ADM. CODE 302.1	121,593	121,593
9 - REMODEL -OCCUPANT LOAD	IBC 1015.1, 1004.6 AND TABLE 1004.5	EXISING 69	53
9.1 -TOTAL OCCUPANT LOADS	CLV ADM. CODE 302.1	1935	1919
10 - NUMBER OF EXITS	IBC 1015.1, 1021, AND TABLE 1015.1; 1021.1, 1021.2	2	2
11 - FIRE RESISTANCE RATING REQUIREMENTS FOR BUILDING ELEMENTS	IBC 602.1, CHAPTER 7, AND TABLE 601		
PRIMARY STRUCTURAL FRAME	TABLE 601	0 HOURS	0 HOURS
BEARING WALLS EXTERIOR	TABLE 601	0 HOURS	0 HOURS
BEARING WALLS INTERIOR	TABLE 601	0 HOURS	0 HOURS
NONBEARING WALLS EXTERIOR	TABLE 601	0 HOURS	0 HOURS
NONBEARING WALLS INTERIOR	TABLE 601	0 HOURS	0 HOURS
FLOOR CONSTRUCTION	TABLE 601	0 HOURS	0 HOURS
ROOF CONSTRUCTION	TABLE 601	0 HOURS	0 HOURS
12 - REQUIRED FIRE RATING RESISTANCE OF EXTERIOR WALLS DUE TO LOCATION ON PROPERTY	IBC 705, AND TABLE 602 (X > 30'0")	0 HOURS	0 HOURS
13 - PROTECTION OF OPENINGS DUE TO LOCATION ON PROPERTY AND MAXIMUM AREA OF EXTERIOR WALL OPENINGS	IBC 705.8 AND TABLE 705.8	NOT REQUIRED	NOT REQUIRED
14 - SPACES REQUIRING FIRE-RESISTANCE-RATED SEPARATION	IBC 420, 509, 706-709, 711, 712, 1008.1, 1002.2,1023.3,3006 & TABLE 505	NOT REQUIRED	NOT REQUIRED
15 - NON SEPARATED OR SEPARATED USES WITH REQUIRED CALCULATIONS	IBC 508.3 OR 508.4 AND TABLE 508.4	NOT REQUIRED	NOT REQUIRED
16 - ROOF COVERING MATERIAL CLASS	IBC TABLE 1505.1	NOT REQUIRED	NOT REQUIRED
17 - REQUIRED PLUMBING FIXTURES	IBC 2902 AND TABLE 2902.1 (SEE PLUMBING CALCULATION)	NO CHANGE	NO CHANGE
18 - SPECIAL INSPECTION(S) REQUIRED	IBC CHAPTER 17	NO	NO
19 - IECC COMPLIANCE REPORTS	IBC 1301 AND 2018 IECC	NO CHANGE	NO CHANGE

INTERCEPTOR ABANDONMENT

1. EXISTING GREASE INTERCEPTOR TO BE ABANDONED MUST BE PUMPED TO REMOVE ANY AND ALL WASTE. PUMPING MUST BE PERFORMED BY A LICENSED WASTE HAULER, AND DOCUMENTATION SHALL BE POSTED ON SITE OR MADE AVAILABLE FOR VERIFICATION DURING THE ABANDONMENT INSPECTION.
2. THE TOP COVER OR ARCH OVER THE GREASE INTERCEPTOR SHALL BE CRUSHED INTO THE EMPTY TANK OR REMOVED.
3. THE GREASE INTERCEPTOR SHALL BE BACK FILLED NO HIGHER THAN THE TOP VERTICAL EDGES OF THE TANK WITH FILL MATERIAL LESS THAN 3 INCHES IN DIAMETER AND FREE OF ORGANIC AND CONSTRUCTION DEBRIS. EXAMPLES: SAND, SANDY LOAM, PEA GRAVEL, CRUSHED LIMESTONE BASE, CLEAN CLASS III SOILS. CLAY SOILS SHOULD BE AVOIDED DUE TO THEIR HIGH SHRINK/SWELL CHARACTERISTICS.

DEFERRED SUBMITTALS

- SPRINKLER & FIRE ALARM

GENERAL NOTES

A. ALL WORK, INCLUDING MATERIALS AND WORKMANSHIP SHALL CONFORM TO THE REQUIREMENTS OF LOCAL CODES, LAWS, AND ORDINANCES.
B. THE CONTRACTORS SHALL VISIT THE JOB SITE PRIOR TO BIDDING AND SHALL VERIFY ALL DIMENSIONS AND CONDITIONS PRIOR TO BEGINNING WORK. SHOULD ANY CONDITION ARISE WHERE THERE IS A DISCREPANCY BETWEEN THE DRAWINGS AND FIELD CONDITIONS, THE ARCHITECT SHALL BE NOTIFIED IMMEDIATELY.
C. THESE DRAWINGS DO NOT INCLUDE NECESSARY COMPONENTS FOR CONSTRUCTION SAFETY. SAFETY OF ALL PARTIES PRESENT ON THE JOB SITE IS THE CONTRACTOR'S RESPONSIBILITY.
D. THE ARCHITECT ASSUMES NO RESPONSIBILITY FOR THE COMPLETENESS OF PLANS FOR BID PURPOSES PRIOR TO ISSUANCE OF BUILDING PERMIT.
E. DO NOT SCALE ANY DRAWINGS IN THIS SET. ALL DIMENSIONS SHALL TAKE PRECEDENCE.
F. ALL OMISSIONS AND CONFLICTS BETWEEN THE VARIOUS ELEMENTS OF THE WORKING DRAWINGS AND OR SPECIFICATIONS SHALL BE BROUGHT TO THE ATTENTION OF THE ARCHITECT IMMEDIATELY BEFORE PROCEEDING WITH ANY WORK SO INVOLVED. NO CHANGES ARE TO BE MADE UNLESS OWNER IS NOTIFIED IN WRITING.
G. THE ARCHITECT'S REVIEW OF SHOP DRAWINGS SHALL NOT RELIEVE THE GENERAL CONTRACTOR FROM RESPONSIBILITY FOR DEVIATIONS FROM DRAWINGS OR SPECIFICATIONS UNLESS HE HAS (IN WRITING) CALLED THE ARCHITECT'S ATTENTION TO SUCH DEVIATIONS AT THE TIME OF SUBMISSION, NOR SHALL IT RELIEVE HIM OF RESPONSIBILITY FOR ERRORS OF ANY SORT IN THE SHOP DRAWINGS.
H. THE CONTRACTOR, AT HIS OWN EXPENSE, SHALL KEEP THE PROJECT AREA AND SURROUNDING AREA FREE FROM DUST NUISANCE. THE WORK SHALL BE IN CONFORMANCE WITH THE AIR POLLUTION CONTROL STANDARDS AND REGULATIONS OF THE STATE DEPARTMENT OF HEALTH.
I. CONSTRUCTION DEBRIS AND WASTES SHALL BE DEPOSITED AT THE APPROPRIATE SITE. THE CONTRACTOR SHALL INFORM THE ENGINEER OF THE LOCATION OF DISPOSAL SITE. THE DISPOSAL SITE MUST ALSO FULFILL THE REQUIREMENTS OF THE LOCAL ORDINANCES.
J. EVERY EXIT DOOR SHALL BE OPENABLE FROM THE INSIDE WITHOUT THE USE OF A KEY OR ANY SPECIAL KNOWLEDGE.
K. FIRE EXTINGUISHERS AND CABINETS SHALL COMPLY TO NFPA REQUIREMENTS.
L. THIS FACILITY SHALL MEET ALL REQUIREMENTS OF THE AMERICAN DISABILITIES ACT.
M. DIMENSIONED LOCATIONS FOR LIGHTING FIXTURES, EQUIPMENT, ACCESSORIES, ETC. ARE BASED ON THE ARCHITECTS SELECTED MANUFACTURER AND PRODUCTS. IT IS THE RESPONSIBILITY OF THE CONTRACTOR TO COORDINATE DIMENSIONS ON ANY PRODUCT THAT IS SUBSTITUTED.
N. ALL INTERIOR FINISH MATERIALS SHALL HAVE A FLAME SPREAD INDEX NOT GREATER THAN SPECIFIED ON IBC 2018 TABLE 803.9 FOR THE GROUP AND LOCATION DESIGNATED.

DRAWING INDEX

FIRE NOTES

1. PROVIDE A PORTABLE FIRE EXTINGUISHER WITH A RATING OF NOT LESS THAN 2-A OR 2-A10BC WITHIN 75 FEET TRAVEL DISTANCE TO ALL PORTIONS OF THE BUILDING INCLUDING DURING CONSTRUCTION. FINAL LOCATIONS WILL BE DETERMINED BY THE INSPECTOR.
2. CONTRACTOR IS RESPONSIBLE TO CONTRACT WITH A LANDLORD APPROVED NEVADA LICENSED FIRE PROTECTION COMPANY TO PROVIDE TENANT FIRE SPRINKLER BUILD-OUT.
3. CONTRACTOR IS RESPONSIBLE TO CONTRACT WITH A STATE APPROVED FIRE ALARM COMPANY. PRIOR TO THE DISABLING OF ANY FIRE ALARM DEVICES, NOTIFY OWNER IN ORDER TO ALLOW TIMELY COODRIDNATION BETWEEN ALL DEPARTMENTS. ALL FIRE ALARM DEVICES THAT ARE NOT DISABLED BUT TEMPORARILY REMOVED FROM CEILINGS OR WALLS AS A RESULT OF SELECTIVE DEMOLITION SHOULD BE PROPERLY SUSPENDED ABOVE CEILING TO PREVENT DAMAGE OR FALSE ALARMS DURING CONSTRUCTION (IN NO CASE SHALL DEVICE BE SUSPENDED BY ITS OWN ALARM WIRING)

FRANKLIN BROYLES
REGISTERED ARCHITECT
No. 7001
Aug 02, 2022
STATE OF NEVADA

IZ design studio
design . . sustainability . . architecture.
tel. 702 441 0026
fax. 702. 475. 4755
www.izdesignstudio.com
7229 W. Sahara Ave Suite 120
Las Vegas, NV 89117
Nevada

COVER
SNHD
SNHD BEHAVIORAL HEALTH 2
278 S. DECATUR BLVD
LAS VEGAS, NV 89107

Sheet Name
Project Name

DELTA NO.	REVISION NO.	DESCRIPTION	DATE
1	1	CORRECTION#1	08.02.2023

Project Number	21479
Date	08.02.2023
Drawn By	KC
Checked By	IB

G000

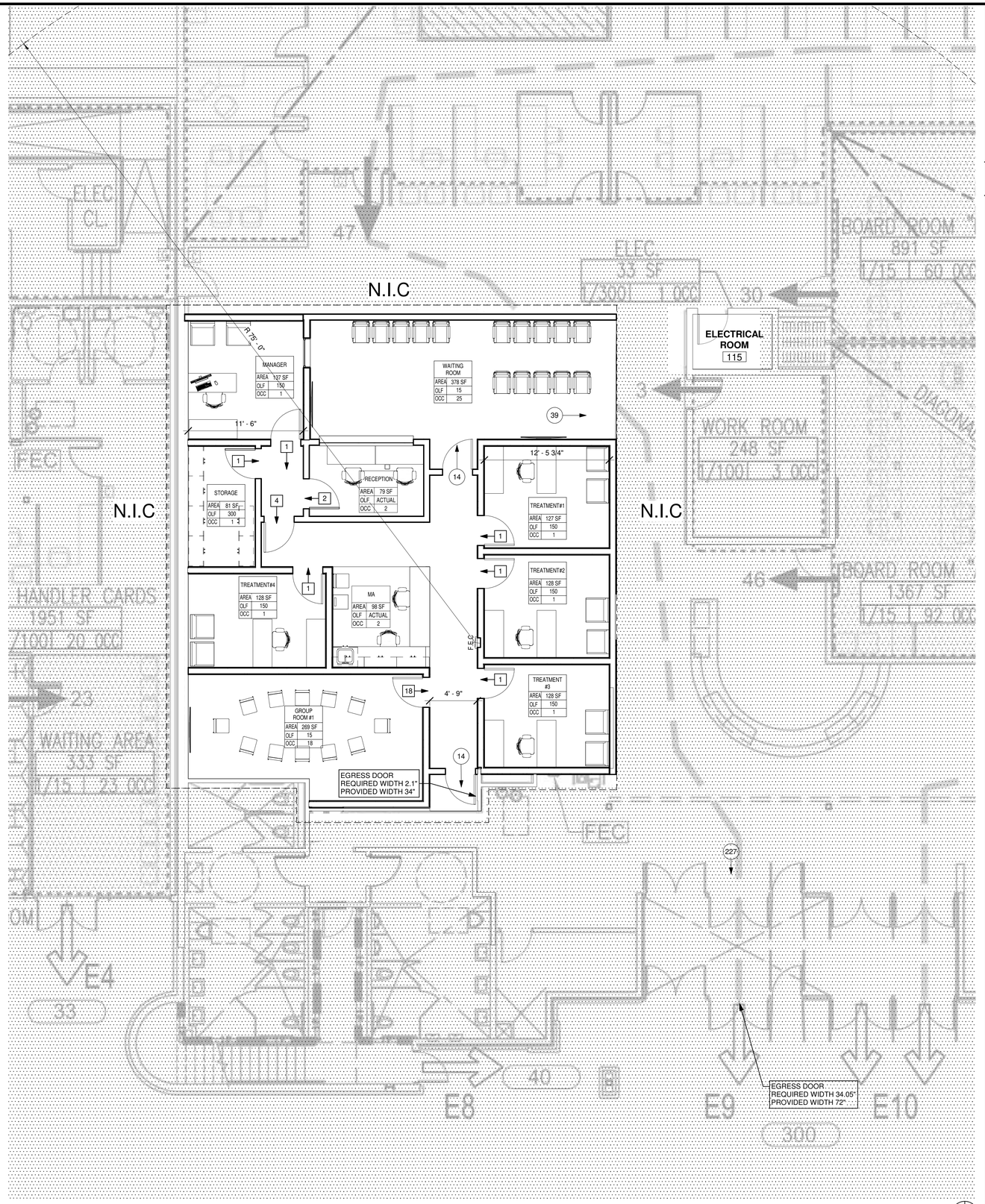

1 LEVEL 1 - EGRESS PLAN
3/16" = 1'-0"

EGRESS NOTES

A ALL EGRESS DOORS SHALL BE OPERABLE FROM THE INSIDE WITHOUT THE USE OF A KEY OR SPECIAL KNOWLEDGE.

B THE MAXIMUM EFFORT TO OPERATE DOORS SHALL NOT EXCEED 8.5 POUNDS FOR EXTERIOR DOORS AND 5.0 POUNDS FOR INTERIOR DOORS.

C THE BOTTOM 10" ON THE PUSH SIDE OF THE DOOR SHALL HAVE A SMOOTH UNINTERRUPTED SURFACE THAT ALLOWS THE DOOR TO BE OPENED BY A WHEELCHAIR FOOTREST WITHOUT CREATING A TRAP OR HAZARDOUS CONDITION.

D PROVIDE PANIC HARDWARE AS REQUIRED BY CODE.

EGRESS SYMBOLS LEGEND

XX → NUMBER OF OCCUPANTS EXITING A ROOM

XX → NUMBER OF OCUPANTS EXITING AN AREA

MA
AREA/F.SF
CV-FACTUAL
OCC-2"

OCCUPANT CALCULATION TAG
PER IBC TABLE 1004.5
MAXIMUM FLOOR AREA
ALLOWANCES PER OCCUPANT

F.E.C. FIRE EXTINGUISHER CABINET

P.H. PANIC HARDWARE

OCCUPANCY CALCULATIONS

ROOM NAME	AREA	FACTOR	OCCUPANCY
MANAGER	137 SF	150	1
STORAGE	81 SF	300	1
GROUP ROOM #1	269 SF	15	18
TREATMENT#1	127 SF	150	1
TREATMENT#2	128 SF	150	1
TREATMENT #3	128 SF	150	1
WAITING ROOM	378 SF	15	25
TREATMENT#4	128 SF	150	1
MA	93 SF	ACTUAL	2
RECEPTION	81 SF	ACTUAL	2
TOTAL	1551 SF		53

FRANKLIN BROYLES
REGISTERED ARCHITECT
NO. 7001
July 11, 2005
STATE OF NEVADA

IZ design studio
design . . sustainability . . architecture .

tel. 702 441 0026
fax. 702. 475. 4755
www.izdesignstudio.com

7229 W. Sahara Ave Suite 120
Las Vegas, NV 89117
Nevada

Sheet Name
EGRESS

Project Name
SNHD
SNHD BEHAVIORAL HEALTH 2
278 S. DECATUR BLVD
LAS VEGAS, NV 89107

DELTA NO.	REVISION NO.	DESCRIPTION	DATE

Project Number	21479
Date	08.02.2023
Drawn By	KC
Checked By	IB

G100

SPECIFICATION

SECTION 08 11 00 - METAL DOORS AND FRAMES

PART 1 GENERAL
1.1 SECTION INCLUDES
A. Non-rated steel doors.
B. Non-rated steel frames.
C. Fire-rated steel doors.
1.2 REFERENCES
A. Steel Door Institute Standard:
    1. ANSI/SDI-100 - Standard Steel Doors and Frames.
B. ASTM International Standard:
    1. ASTM A653 – Standard Specifications for Steel Sheet, Zinc-coated (Galvanized), or Zinc-Alloy-coated (Galvanneated) by the Hot-Dip Process.
1.3 RELATED SECTIONS
A. Section 08 71 00 – Finish Hardware.
1.4 SUBMITTALS
A. In accordance with Section 01 33 00.
B. Indicate elevations, internal reinforcement, closure method and finish.
C. Indicate configurations, location of cutouts for hardware reinforcement, finish and installation.
1.5 QUALITY ASSURANCE
A. Fire rated assemblies shall be manufactured in accordance with Underwriters Laboratories established procedures and shall bear the appropriate labels for each application.
1.6 DELIVERY, STORAGE AND HANDLING
A. Conform to requirements of ANSI/SDI-100.
B. In accordance with Section 01 66 00.
C. Package items individually; label and identify package with door opening code to match hardware schedule.
1.7 WARRANTY
A. Provide 5 year warranty to commence with final completion of the job.

PART 2 - PRODUCTS
2.1 ACCEPTABLE MANUFACTURERS
A. Exterior Door and Frames: Curries Co., Steelcraft or Owner approved equal.
2.2 MATERIALS
A. Hollow Metal Doors: Galvanized steel in accordance with ASTM A653, 1-3/4 inch, flush metal door.
    1. Exterior door: 16 gage.
    2. Interior door: 18 gage.
B. Interior and Exterior Frames: 16 gage galvanized.
C. Core material:
    1. Nonlabeled doors or labeled doors, polystyrene foam core, self-extinguishing, non-toxic in case of fire.
    2. Fire labeled doors with temperature rise rating to have a mineral fiber core sufficient to obtain a 250 degree F temperature rating.
2.3 FINISH FOR DOORS AND FRAMES
A. All surfaces of the door and frame shall receive a factory applied coat of baked-on rust-inhibiting primer.
B. Field Finish: In accordance with Section 09 96 00 color as selected by Owner.
2.4 FABRICATION
A. Fabricate all doors and frames in accordance with ANSI/SDI-100:
    1. Classification: SDI Level 2 – Model 1.
B. Prepare doors to receive finish hardware per schedule in Section 08 71 00.
C. Provide frames with a minimum of three anchors per jamb suitable for the adjoining wall construction, and at least one base anchor. Frames over 7-foot 6 inches shall be provided with an additional anchor per jamb.

PART 3 - INSTALLATION
3.1 DOOR INSTALLATION
A. Install doors plumb and level in accordance with ANSI/SDI-100 and DHI.
B.Maximum clearances, unless otherwise specified:
    1. Between door and frame: 1/8 inch.
    2. Between meeting edge of pairs of doors: 3/16 inch.
    3. Between bottom of door and frame: 3/4 inch.
    4. Between the face of the door and the stop: 1/16 inch to 3/32 inch.
3.2 FRAME INSTALLATION
A. Install frames plumb and level in accordance with ANSI/SDI-100 and DHI.
B. Tolerances:
    1. Plumbness: 1/16 inch maximum.
    2. Levelness: 1/16 inch maximum.
    3. Maximum: 1/16 inch allowable tolerance on total opening.
C. Coordinate with wall construction for anchor placement.

END OF SECTION 08 11 00

SECTION 08 14 16 - FLUSH WOOD DOORS

PART 1 GENERAL
1.1 SECTION INCLUDES
A. Non-rated wood doors.
B. Fire-rated wood doors.
1.2 REFERENCES
A. ANSI A117.1 – Accessible and Usable Buildings and Facilities
B. ANSI 208.1 – Wood Particleboard
C. UL 10C – Positive Pressure Fire Tests of Door Assemblies; UL - 1784 Standard for Air Leakage Tests of Door Assemblies.
D. Window and Door Manufacturers Association – ANSI/WDMA I.S.1-A Architectural Wood Flush Doors
1.3 RELATED SECTIONS
A. Section 08 11 00 – Metal Doors and Frames
B. Section 08 71 00 – Finish Hardware.
1.4 SUBMITTALS
A. In accordance with Section 01 33 00.
B. Product Data: For each type of door and finish.
    1. Core and edge construction.
    2. Fire rated doors.
    3. Glazed openings.
    4. Finishes.
C. Samples for factory-finished doors.
D. Shop Drawings and Schedule:
    1.Use same unit designations used in Contract Documents.
    2. Hardware preparation.
    3. Glazed openings
1.5 QUALITY ASSURANCE
A. Fire rated assemblies shall be manufactured in accordance with Underwriters Laboratories established procedures and shall bear the appropriate labels for each application.
1.6 DELIVERY, STORAGE AND HANDLING
A. Package factory-finished doors individually in manufacturer's standard plastic bags, stretch wrap, or cardboard cartons.
B. Store doors inside building in clean, dry location.
C. Mark each door on top rail with opening number used on Shop Drawings.
1.7 WARRANTY
A. Provide 5 year warranty to commence with final completion of the job.

PART 2 - PRODUCTS
2.1 MANUFACTURERS: ONE OF THE FOLLOWING:
A. Basis of design: Masonite Architectural, Aspiro Series – Choice Laminates/ High-Pressure Decorative Laminates.
B. Eggers Industries.
C. VT Industries Inc.
2.2 DOOR CONSTRUCTION, GENERAL
A. Quality Standard: WDMA I.S.1-A
B. Fire-Rated Wood Doors: Labeled by a testing and inspecting agency acceptable to authorities having jurisdiction based on testing at positive pressure according to NFPA 252 or UL 10C.
C. Certified Wood: Wood doors shall be certified as "FSC Pure" or "FSC Mixed Credit" according to FSC STD-01-001, "FSC Principles and Criteria for Forest Stewardship," and to FSC STD-40-004, "FSC Standard for Chain of Custody Certification."
D. Low-Emitting Materials: Provide doors made with adhesives and composite wood products that do not contain urea formaldehyde.
E. WDMA I.S.1-A Performance Grade:
    1. Performance Grade: Extra Heavy Duty.
    2. Aesthetic Grade: Premium.
F. Particleboard-Core Doors: Provide structural composite lumber cores instead of particleboard cores for doors with exit devices.
G. Fire-Protection-Rated Doors: Provide core specified or mineral core as needed to provide fire-protection rating indicated. Provide the following for mineral-core doors:
    1. Composite blocking where required to eliminate through-bolting hardware.
    2. Laminated-edge construction.
    3. Formed-steel edges and astragals for pairs of doors.
2.3 FLUSH WOOD DOORS
A. Doors for Transparent Finish:
    1. Interior Solid-Core Doors: Premium grade, particleboard or structural composite lumber cores.
        a. Faces: Grade A, Match Existing.
        b. Veneer Matching: Match Existing.
2.4 FABRICATION AND FINISHING
A. Factory fit doors to suit frame-opening sizes indicated and to comply with clearances specified.
        B. Factory machine doors for hardware that is not surface applied. Locate hardware to comply with DHI-WDHS-3.

SECTION 08 14 16 - FLUSH WOOD DOORS - CONTINUED

C. Cut and trim openings to comply with referenced standards.
    1. Trim light openings with moldings indicated.
    2. Factory install glazing in doors indicated to be factory finished.
    3. Factory install louvers in prepared openings
D. Factory finish doors indicated for transparent finish with stain and manufacturer's standard finish complying with WDMA TR-6, catalyzed polyurethane for grade specified for doors.
    1. Sheen: Match Existing.

PART 3 EXECUTION
3.1 INSTALLATION
A. Install doors to comply with manufacturer's written instructions and WDMA I.S.1-A, and as indicated.
    1. Install fire-rated doors to comply with NFPA 80.
B. Clearances: As follows unless otherwise indicated:
    1. 1/8 inch (3.2 mm) at heads, jambs, and between pairs of doors.
    2. 1/8 inch (3.2 mm) from bottom of door to top of decorative floor finish or covering.
    3. 1/4 inch (6.4 mm) from bottom of door to top of threshold.
    4. Comply with NFPA 80 for fire-rated doors.
C. Repair, refinish, or replace factory-finished doors damaged during installation, as directed by Architect.

END OF SECTION 08 14 16

SECTION 08 34 73 - SOUND CONTROL DOOR ASSEMBLIES

PART 1 GENERAL
1.1 SECTION INCLUDES
A. Steel acoustical door assemblies.
1.2 RELATED SECTIONS
A. Section 08 71 00 - Door Hardware.
1.3 REFERENCES
A. ASTM A 1008 - Standard Specification for Steel, Carbon, Cold-Rolled Sheet, Commercial Quality.
B. ASTM A 569 - Standard Specification for Steel, Carbon, (0.15 Maximum Percent), Hot-Rolled Sheet and Strip, Commercial Quality.
C. ASTM A 653/A 653M - Standard Specification for Steel Sheet, Zinc Coated (Galvanized) or Zinc-Iron Alloy-Coated (Galvannealed) by the Hot Dip Process.
D. ASTM B 117 - Standard Method of Salt Spray (Fog) Testing.
E. ASTM D 1735 - Standard Practice for Testing Water Resistance of Coating Using Water Fog Apparatus.
F. ASTM E 90 - Standard Test Method for Laboratory Measurement of Airborne-Sound Transmission Loss of Building Partitions.
G. ASTM E 336 - Standard Test Method for Measurement of Airborne Sound Insulation in Buildings.
H. ASTM E 413 - Classification for Determination of Sound Transmission Class.
I. HMMA 840 - Installation and Storage of Hollow Metal Doors and Frames; Hollow Metal Manufacturers Association.
1.4 SYSTEM DESCRIPTION
A. Design requirements: Acoustical door assemblies to include doors, frames, and door hardware to include gasketing systems, retainers and retainer covers, automatic or fixed door bottoms, cam-lift hinges, thresholds, and sills, required to achieve specified performance requirements.
B. Performance requirements: Sound Transmission Coefficient rating of STC 45 for installed assembly, when tested as operable door assembly in accordance with ASTM E 90 and ASTM E 413.
1.5 SUBMITTALS
A. Submit under provisions of Section 01300.
B. Product data: Indicate door materials and construction.
C. Shop drawings: Indicate door opening criteria, elevations, sizes, types, swings; identify and detail cutouts.
D. Quality assurance submittals:
    1. Test Reports:
        a. Certified laboratory reports, performed in accordance with ASTM E90 and ASTM E 413, from independent testing laboratory qualified under the National Voluntary Laboratory Accreditation Program (NVLAP) supporting compliance of assemblies to specified requirements.
        b. Minimum five (5) field tests, performed in accordance with ASTM E 336 and ASTM E 413 by five separate independent testing agencies, substantiating acoustical performance when installed at no less than four (5) FSTC ratings below the specified STC rating.
    2. Certificates:
        a. Contractor's certification that:
            1) Products of this section, as provided, meet or exceed specified requirements.
            2) Manufacturer of products of this section meet specified qualifications.
    3. Manufacturer's instructions: Printed installation instructions for each component.
E. Closeout submittals:
    1. Warranty documents, executed by manufacturer in Owner's name.
    2. Operation and maintenance data for assembly components.
    3. Certified statement of manufacturer's authorized representative, as specified in FIELD QUALITY CONTROL Article of PART 3 of this section.
    4. Certified test reports of independent testing agency, as specified in FIELD QUALITY CONTROL Article of PART 3 of this section.

1.6 QUALITY ASSURANCE
A. Qualifications:
    1. Manufacturer: Minimum five (5) years documented experience producing systems specified in this section.
    2. Installer: Minimum five (5) years documented experience installing systems specified in this section, and approved by manufacturer.

1.7 DELIVERY, STORAGE, AND HANDLING
A. Store frames in accordance with requirements of HMMA 840.
B. Store steel doors in accordance with requirements of HMMA 840.
C. Remove wraps or covers from doors and frames upon delivery at the building site; clean and touch-up scratches or disfigurement caused by shipping or handling promptly with rust inhibitive primer.
D. Store units on planks or dunnage in a dry location; store doors in a vertical position spaced by blocking.
    E. Store units covered to protect them from damage, but permitting air circulation.

1.8 SCHEDULING
A. Furnish manufacturer's mounting templates for door hardware specified in Section 08710 to manufacturer of products of this section in time for factory preparation for door hardware.

PART 2 PRODUCTS
2.1 MANUFACTURERS
A. Acceptable manufacturer:
    1. Krieger Specialty Products, 4880 Gregg Road, Pico Rivera CA 90660;
       Telephone 562-695-0645, FAX 562-692-0146.
    2. OSHKOSH Door Company, 2501 Universal Street, P.O. Box 2468,
       Oshkosh, WI 54904
    3. Fleming Door Product (Assa Abloy), 101 Ashbridge Circle, Woodbridge
    Ontario L4L 3R5, Canada
.
2.2 MATERIALS
A. Steel sheet: One of the following:
    1. Cold-rolled steel sheet conforming to ASTM A 1008, commercial quality.
    2. Hot-rolled steel sheet conforming to ASTM A 569, pickled and oiled, commercial quality.
B. Galvanized steel sheet: ASTM A 653/A 653M, commercial quality, minimum G60 zinc coating.
C. Acoustical material: Manufacturer's standard for required STC rating.
D. Primer: Meeting ASTM B 117 salt spray for 150 hours, and ASTM D 1735 water fog test for organic coatings for 200 hours.
E. Glazing: Specified in Section 08 80 00.

2.3 COMPONENTS
A. Steel doors: Fabricate in accordance with Architect-approved shop drawings, 1-3/4 inches minimum thickness, and as follows:
    1. Face sheets:
        a. Doors for interior use: Steel sheet, minimum 16 gage sheet thickness.
        b. Doors for exterior use: Galvanized steel sheet, minimum 16 gage sheet thickness.
        c. Visible seams on face sheets not permitted.
    2. Core:
        a. Stiffen face sheets with continuous vertical steel sections.
        b. Fill spaces between stiffeners with acoustical material.
    3. Vertical edges:
        a. Join face sheets at vertical edges by continuous welding:
            1) Join door faces by continuous weld on each edge, extending full door height.
            2) Grind, fill, and dress welds to provide smooth flush surface.
        b. Form edge profiles both vertical edges of doors with 1/8 inch in 2 inches bevel.
        c. Visible seams on vertical edges not permitted.
    4. Horizontal edges:
        a. Close top and bottom edges of doors with continuous steel channels, 16 gage minimum; spot-weld channels to both door faces.
        b. Provide openings in bottom closure of exterior doors to permit escape of entrapped moisture.
        c. Provide additional flush closing channel at top edge of doors; spot-weld channel to both door faces.
    5. Hardware preparation:
        a. Mortise, reinforce, drill, and tap doors at factory for fully templated mortised hardware only, in accordance with approved hardware schedule and supplied templates.

        b. Provide reinforcing plates at surface-mounted or non-templated hardware locations. Surface applied hardware are drilled on site by others.
B. Frames: Fabricate in accordance with Architect-approved shop drawings, and as follows:
    1. Frames for interior use: Fabricate from steel sheet, minimum 14-gage thickness.

SECTION 08 34 73 - SOUND CONTROL DOOR ASSEMBLIES - CONTINUED
    2. Frames for exterior use: Fabricate from galvanized steel sheet, minimum 14-gage thickness.
    3. Form frame members straight, and of uniform profile through lengths, as welded units with integral trim, of sizes and profiles indicated.
        c. Weld contact edges of joints closed tight.
        d. Miter perimeter trim faces and weld continuously.
    4. When shipping limitations so dictate, fabricate frames for large openings in sections designed for assembly in the field; install alignment plates or angles, of same material and gage as frame, at each joint.
    5. Hardware preparation:
        a. Mortise, reinforce, drill, and tap frames at factory for fully templated mortised hardware only, in accordance with Architect-approved shop drawings and supplied templates.
        b. Provide reinforcing plates at surface-mounted or non-templated hardware locations.
    6. Floor anchors:
        a. Fabricate of same material as frame material; minimum 14 gage.
        b. Weld anchors inside each jamb for floor anchorage.
    7. Jamb anchors:
        a. Fabricate of same material as frame material; weld anchors inside each jamb for wall anchorage
        b. Provide anchor types for indicated adjacent wall construction:
            1) Frames for installation in masonry walls: Adjustable jamb anchors, 16 gage, T-shape type.
            2) Frames for installation in stud partitions: Continuous 16 gage steel channel to surround stud, welded inside each jamb.
    8. Plaster guards: Fabricate from minimum 22 gage steel; weld in place at hardware mortises on frames to be set in plaster, masonry, or concrete openings.
    9. Provide welded frames with temporary steel spreader welded to jamb feet for bracing during shipping and handling.
E. Loose stops:
    1. Fabricate of minimum 12 gage steel, with factory-drilled and countersunk holes for fasteners.
    2. Form stops for mitered corner joints.
    3. Supply cadmium-coated or zinc-coated fasteners, size and quantity required for fastener holes.

F. Door hardware:
    1. Supply gasketing systems, retainers, retainer covers, automatic door bottoms, fixed door bottoms, cam-lift hinges, thresholds, and sills as indicated on Architect-approved shop drawings, or specified in manufacturer's product data for project conditions, to achieve specified performance requirements.
    2. All other door hardware is specified in Section 08710.

2.4 SILL CONDITION
Where indicated on the drawings, furnish a smooth flush stainless steel or aluminum threshold for the door bottom to seal against when the door is in the closed position. The minimum width of the threshold shall be door thickness plus 4” to allow the threshold to extend a minimum of 1 ½” beyond the face of the door on both sides of the opening. For openings where carpet extends through the opening, the threshold height shall be 1/8” greater in height than the carpet thickness.
2.5 FINISH
Finish: All tool marks and surface imperfections shall be removed and exposed faces of all welded joints shall be dressed smooth. Assemblies shall be treated and shall be coated on all accessible surfaces with a rust-inhibitive primer which meets ASTM B117 salt spray for 150 hours, and ASTM D1735 water fog test for organic coatings for 200 hours, and which is fully cured prior to shipment.
2.6 SOURCE QUALITY CONTROL
A. Hardware location on doors and frames:
    1. Hinges:
        a. Top: 5 inches from head of frame to top of hinge.
        b. Bottom: 10 inches from finished floor to bottom of hinge.
    2. Unit and integral type locks and latches: 38 inches from finished floor to centerline of knob.
    3. Deadlocks: 48 inches from finished floor to centerline of strike.
    4. Panic hardware: 38 inches from finished floor to centerline of cross bar, or as indicated on hardware template.

PART 3 EXECUTION
3.1 EXAMINATION
Note to Architect: Proper installation is essential to the proper performance of acoustical door and frame assemblies.

It shall be the responsibility of the General Contractor to perform the following:

A. Verification of conditions:
    1. Prior to installation, check and correct frames for size, swing, squareness, alignment, twist and plumb.
    2. Verify openings are in accordance with approved shop drawings.
B. Installer's examination:
    1. Have installer of this section examine conditions under which construction activities of this section are to be performed, then submit written notification if such conditions are unacceptable.
    2. Transmit two copies of installer's report to Architect within 24 hours of receipt.
    3. Beginning construction activities of this section before unacceptable conditions have been corrected is prohibited.
    4. Beginning construction activities of this section indicates installer's acceptance of conditions.
C. Solidly grout fill frames where so indicated on the drawings or the approved submittals, eliminating all voids. The flanking path normally found behind the frame must be packed with either 6-12 lb rock wool insulation or grout filled to assure minimum sound transmission.

3.2 PREPARATION
A. Remove steel spreaders from welded frames prior to installation; use of spreaders for installation purposes not permitted.
3.3 INSTALLATION
A. Install units in accordance with approved shop drawings and manufacturer's printed installation instructions; in addition, install steel components in accordance with HMMA 840.

C. Fill voids between concealed side of frame and adjacent wall construction with lightweight gypsum plaster in accordance with approved shop drawings or manufacturer's printed installation instructions.

D. Finish surfaces having abrasion damage smooth; touch-up with rust inhibitive primer.

E. Install gasketing systems, retainers, retainer covers, automatic door bottoms, fixed door bottoms, cam-lift hinges, thresholds, and sills in accordance with manufacturer's printed instructions.

F. Installation of all other door hardware is specified in Section 08 71 00.

G. Field painting is specified in Section 09 90 00.

H. Site tolerances: Do not exceed the following installation tolerances:
    1. Squareness: Plus or minus 1/16 inch measured on a line, 90 degrees from one jamb, at the upper corner of the frame at the other jamb.
    2. Alignment: Plus or minus 1/16 inch measured on jambs on a horizontal line parallel to the plane of the wall.
    3. Twist: Plus or minus 1/16 inch measured at face corners of jambs on parallel lines perpendicular to the plane of the wall.
    4. Plumb: Plus or minus 1/16 inch measured on the jamb at the floor.

NOTE ** The above tolerances provide a reasonable guideline for proper installation of hollow metal frames. However, it should be noted that the cumulative effect of the tolerances at their maximum levels will result in sufficient misalignment to prevent the door from functioning properly. Care should be taken to keep each of these tolerances as close to zero as possible.
3.4 FIELD QUALITY CONTROL
A. Engage and pay for the field services of manufacturer's authorized representative to:
    1. Inspect completed installation of door and frame assemblies.
    2. Test all components through a minimum of ten complete cycles of operation.
    3. Verify each component is correctly installed.
    4. Direct installer in adjusting components for correct operation.
    5. Issue certified statement of compliance of installed door and frame assemblies to Architect-approved shop drawings.
    6. Instruct Owner's maintenance personnel in correct operation and maintenance procedures for components of door and frame assemblies.
B. Engage and pay for the services of independent testing agency to:
    1. Test door and frame assemblies selected by Owner or Architect in accordance with ASTM E 336.
    2. Issue certified report documenting compliance of installed door and frame assemblies to specified acoustical performance requirements.
C. Notify Architect a minimum of seven (7) calendar days prior to scheduled testing dates.

3.5 MAINTENANCE
A. Instruct the Owner’s Maintenance Personnel regarding the proper operation and maintenance of these doors.

END OF SECTION 08 34 73

SECTION 09 22 16 NON-STRUCTURAL METAL FRAMING

PART 1 GENERAL
1.1 SECTION REQUIREMENTS
A. Submittals: Product Data.

SECTION 09 22 16 NON-STRUCTURAL METAL FRAMING - CONTINUED

PART 2 PRODUCTS
2.1 PERFORMANCE REQUIREMENTS
A. Fire-Resistance-Rated Assemblies: Provide materials and construction identical to those tested in assemblies per ASTM E 119 by an independent testing and inspecting agency acceptable to authorities having jurisdiction.
B. STC-Rated Assemblies: Provide materials and construction identical to those tested in assemblies per ASTM E 90 and classified per ASTM E 413 by a qualified independent testing and inspecting agency.
2.2 METAL FRAMING AND SUPPORTS
A. Steel Framing Members, General: ASTM C 754.
    1. Steel Sheet Components: ASTM C 645. Thickness specified is minimum uncoated base-metal thickness.
    2. Protective Coating: ASTM A 653/A 653M, G40, hot-dip galvanized zinc coating.
B. Framing Systems:
    1. Studs and Runners: In depth indicated and 0.033 inch thick unless otherwise indicated.
    2. Flat Strap and Backing: 0.033 inch thick.
C. Suspension Systems:
    1. Tie Wire: ASTM A 641/A 641M, Class 1 zinc coating, soft temper, 0.062-inch diameter, or double strand of 0.048-inch- diameter wire.
    2. Wire Hangers: ASTM A 641/A 641M, Class 1 zinc coating, soft temper, and 0.162-inch diameter.
3. Grid Suspension System for Gypsum Board Ceilings: Interlocking, direct-hung system.
    a. Manufacturers: Subject to compliance with requirements, provide products by one of the following:
        1) Armstrong World Industries, Inc.
        2) Chicago Metallic Corporation.
        3) United States Gypsum Company.
2.3 ACCESSORIES
A. General: Comply with referenced installation standards.
    1. Fasteners for Metal Framing: Of type, material, size, corrosion resistance, holding power, and other properties required to fasten steel members to substrates.

PART 3 EXECUTION
3.1 INSTALLATION
A. Install steel framing to comply with ASTM C 754."
    1. Gypsum Plaster Assemblies: Also comply with ASTM C 841.
    2. Portland Cement Plaster Assemblies: Also comply with ASTM C 1063.
    3. Gypsum Veneer Plaster Assemblies: Also comply with ASTM C 844.
    4. Gypsum Board Assemblies: Also comply with ASTM C 840.
B. Install supplementary framing, and blocking to support fixtures, equipment services, heavy trim, grab bars, toilet accessories, furnishings, or similar construction.
C. Isolate steel framing from building structure, except at floor, to prevent transfer of loading imposed by structural movement.
    1.Where studs are installed directly against exterior walls, install isolation strip between studs and wall.
D. Fire-Resistance-Rated Assemblies: Comply with requirements of listed assemblies.
E. Install suspension systems level to within 1/8 inch in 12 feet.

END OF SECTION 09 22 16

SECTION 09 29 00 GYPSUM BOARD

PART 1 GENERAL
1.1 SECTION REQUIREMENTS
A. Submittals: Product Data.

SECTION 09 29 00 GYPSUM BOARD - CONTINUED

PART 2 - PRODUCTS
2.1 PPERFORMANCE REQUIREMENTS
A. Fire-Resistance-Rated Assemblies: Provide materials and construction identical to those tested in assemblies per ASTM E 119 by an independent testing and inspecting agency acceptable to authorities having jurisdiction.
B. STC-Rated Assemblies: Provide materials and construction identical to those tested in assemblies per ASTM E 90 and classified per ASTM E 413 by a qualified independent testing and inspecting agency.
2.2 PANEL PRODUCTS
A. Provide in maximum lengths available to minimize end-to-end butt joints.
B. Interior Gypsum Board: ASTM C 1396/C 1396M, in thickness indicated, with manufacturer's standard edges. Regular type unless otherwise indicated Foil backed where indicated Type X where indicated Type as required for specific fire-resistance-rated assemblies Sag-resistant type for ceiling surfaces.
    1. Manufacturers: Subject to compliance with requirements, available manufacturers offering products that may be incorporated into the Work include, but are not limited to, the following:
        a. CertainTeed Corporation.
        b. Georgia-Pacific Building Products.
        c. United States Gypsum Company.
2.3 ACCESSORIES
A. Trim Accessories: ASTM C 1047, formed from galvanized or aluminum-coated steel sheet, rolled zinc, plastic, or paper-faced galvanized-steel sheet. For exterior trim, use accessories formed from hot-dip galvanized-steel sheet, plastic, or rolled zinc.
    1. Provide NO-COAT® 90-degree cornerbead at outside corners unless otherwise indicated.
    2. Provide LC-bead (J-bead) at exposed panel edges.
    3. Provide control joints where indicated.
B. Joint-Treatment Materials: ASTM C 475/C 475M.
    1. Joint Tape: Paper unless otherwise recommended by panel manufacturer.
    2. Joint Compounds: Setting-type or Drying-type.
    3. Cementitious Backer Unit Joint-Treatment Materials: Products recommended by cementitious backer unit manufacturer.
C. Laminating Adhesive: Adhesive or joint compound recommended for directly adhering gypsum panels to continuous substrate.
    1. Low-Emitting Materials: Comply with current VOC rules published by the SCAQMD.
D. Acoustical Sealant for Exposed and Concealed Joints: Nonsag, paintable, nonstaining latex sealant complying with ASTM C 834.
    1. Low-Emitting Materials: Comply with current VOC rules published by the SCAQMD.
E. Sound-Attenuation Blankets: ASTM C 665, Type I (unfaced).

PART 3 EXECUTION
3.1 INSTALLATION
A. Install gypsum board to comply with ASTM C 840.
    1. Isolate gypsum board assemblies from abutting structural and masonry work. Provide edge trim and acoustical sealant.
    2. Single-Layer Fastening Methods: Fasten gypsum panels to supports with screws.
    3. Multilayer Fastening Methods: Fasten base layers and face layer separately to supports with screws with screws, and face layers to base layers with adhesive and supplementary fasteners.
B. Install cementitious backer units to comply with ANSI A108.11.
C. Fire-Resistance-Rated Assemblies: Comply with requirements of listed assemblies.
D. Finishing Gypsum Board: ASTM C 840.
    1. At concealed areas, unless a higher level of finish is required for fire-resistance-rated assemblies, provide Level 1 finish: Embed tape at joints.
    2. At substrates for tile, provide Level 2 finish: Embed tape and apply separate first coat of joint compound to tape, fasteners, and trim flanges.
    3. Unless otherwise indicated, provide Level 3 finish: Embed tape and apply separate first, fill, and finish coats of joint compound to tape, fasteners, and trim flanges.
    4. Texture Finish Application: Mix and apply finish using powered spray equipment, to produce a uniform texture free of starved spots or other evidence of thin application or of application patterns.
    5. At public lobby, provide Level 4 smooth finish at all exposed gypsum board. No texture.

END OF SECTION 09 29 00

SECTION 09 91 23 - INTERIOR PAINTING

PART 1 GENERAL
1.1 RELATED DOCUMENTS
A. Drawings and general provisions of the Contract, including General and Supplementary Conditions and Division 01 Specification Sections, apply to this Section.
1.2 SUMMARY
A. Section includes surface preparation and the application of paint systems on the following interior substrates:
    1. Concrete masonry units (CMU).
    2. Gypsum board.
B. Related Requirements:
1.3 ACTION SUBMITTALS
A. Product Data: For each type of product. Include preparation requirements and application instructions.
B. Sustainable Design Submittals:
    1. Product Data for Credit EQ 4.2: For paints and coatings, including printed statement of VOC content.
    2. Laboratory Test Reports: For paints and coatings, indicating compliance with requirements for low-emitting materials.
C. Samples for Initial Selection: For each type of topcoat product.
D. Samples for Verification: For each type of paint system and in each color and gloss of topcoat.
    1. Submit Samples on rigid backing, 8 inches square.
    2. Label each coat of each Sample.
    3. Label each Sample for location and application area.
E. Product List: For each product indicated, include the following:
    1. Cross-reference to paint system and locations of application areas. Use same designations indicated on Drawings and in schedules.
    2. VOC content.

SECTION 09 91 23 - INTERIOR PAINTING - CONTINUED
1.4 CLOSEOUT SUBMITTALS
A. Coating Maintenance Manual: Provide coating maintenance manual including area summary with finish schedule, area detail designating location where each product/color/finish was used, product data pages, material safety data sheets, care and cleaning instructions, touch-up procedures, and color samples of each color and finish used.
1.5 QUALITY ASSURANCE
A. Mockups: Apply mockups of each paint system indicated and each color and finish selected to verify preliminary selections made under Sample submittals and to demonstrate aesthetic effects and set quality standards for materials and execution.
    1. Subject to compliance with requirements, approved mockups may become part of the completed Work if undisturbed at time of Substantial Completion.
1.6 DELIVERY, STORAGE, AND HANDLING
A. Delivery and Handling: Deliver products to Project site in an undamaged condition in manufacturer's original sealed containers, complete with labels and instructions for handling, storing, unpacking, protecting, and installing. Packaging shall bear the manufacturer’s label with the following information:
    1. Product name and type (description).
    2. Batch date.
    3. Color number.
    4. VOC content.
    5. Environmental handling requirements.
    6. Surface preparation requirements.
    7. Application instructions.
B. Store materials not in use in tightly covered containers in well-ventilated areas with ambient temperatures continuously maintained at not less than 45 deg F.
    1. Maintain containers in clean condition, free of foreign materials and residue.
    2. Remove rags and waste from storage areas daily.
1.7 FIELD CONDITIONS
A. Apply paints only when temperature of surfaces to be painted and ambient air temperatures are between 50 and 95 deg F.
B. Do not apply paints when relative humidity exceeds 85 percent; at temperatures less than 5 deg F above the dew point; or to damp or wet surfaces.

PART 2 PRODUCTS
2.1 MANUFACTURERS
A. Approved Manufacturers: Subject to compliance with requirements, provide company products indicated or comparable product from one of the following:
    1. Sherwin-Williams.
    2. Vista Paint.
    3. Or equal.
B. Comparable Products: Comparable products of approved manufacturers will be considered in accordance with Section 016000 "Product Requirements," and the following:
    1. Products are approved by manufacturer in writing for application specified.
    2. Products meet performance and physical characteristics of basis of design product including published ratio of solids by volume, plus or minus two percent.
C. Source Limitations: Obtain paint materials from single source from single listed manufacturer.
    1. Manufacturer's designations listed on a separate color schedule are for color reference only and do not indicate prior approval.
2.2 PAINT, GENERAL
A. Material Compatibility:
    1. Provide materials for use within each paint system that are compatible with one another and substrates indicated, under conditions of service and application as demonstrated by manufacturer, based on testing and field experience.
    2. For each coat in a paint system, provide products recommended in writing by manufacturers of topcoat for use in paint system and on substrate indicated.
B. All paints and coatings wet-applied on site must meet the applicable VOC limits of the California Air Resources Board (CARB) 2007, Suggested Control Measure (SCM) for Architectural Coatings, or the South Coast Air Quality Management District (SCAQMD) Rule 1113, effective June 3, 2011.
    1. Flat Paints and Coatings: 50 g/L.
    2. Nonflat Paints and Coatings: 100 g/L.
    3. Dry-Fog Coatings: 150 g/L.
    4. Primers, Sealers, and Undercoaters: 100 g/L.
    5. Industrial Maintenance Coatings: 250 g/L.
    6. Stains: 250 g/L.
    7. Wood Coatings: 275 g/L.
    8. Floor Coatings: 100 g/L.
C. Low-Emitting Materials: Interior paints and coatings shall comply with the testing and product requirements of the California Department of Health Services' "Standard Practice for the Testing of Volatile Organic Emissions from Various Sources Using Small-Scale Environmental Chambers."
D. Threshold: At least 90% by volume, for emissions; 100% for VOC content Complies with California Department of Health Services “Standard Method for the Testing and Evaluation of Volatile Organic Chemical Emissions from Indoor Sources Using Environmental Chambers” Version 1.1-2101 (CA section 01350)
E. Colors: As indicated in a color schedule
2.3 SOURCE QUALITY CONTROL
A. Testing of Paint Materials: Owner reserves the right to invoke the following procedure:
    1. Owner will engage the services of a qualified testing agency to sample paint materials. Contractor will be notified in advance and may be present when samples are taken. If paint materials have already been delivered to Project site, samples may be taken at Project site. Samples will be identified, sealed, and certified by testing agency.
    2. Testing agency will perform tests for compliance with product requirements.
    3. Owner may direct Contractor to stop applying coatings if test results show materials being used do not comply with product requirements. Contractor shall remove noncomplying paint materials from Project site, pay for testing, and repaint surfaces painted with rejected materials. Contractor will be required to remove rejected materials from previously painted surfaces if, on repainting with complying materials, the two paints are incompatible.

PART 3 EXECUTION
3.1 EXAMINATION
A. Examine substrates and conditions, with Applicator present, for compliance with requirements for maximum moisture content and other conditions affecting performance of the Work. Verify suitability of substrates, including surface conditions and compatibility with existing finishes and primers. Where acceptability of substrate conditions is in question, apply samples and perform in-situ testing to verify compatibility, adhesion, and film integrity of new paint application.
1. Report, in writing, conditions that may affect application, appearance, or performance of paint.B. Substrate Conditions:
    1. Maximum Moisture Content of Substrates: When measured with an electronic moisture meter as follows:
        a. Concrete: 12 percent.
        b. Masonry (Clay and CMU): 12 percent.
        c. Wood: 15 percent.
        d. Gypsum Board: 12 percent.
        e. Plaster: 12 percent.
    2. Gypsum Board Substrates: Verify that finishing compound is sanded smooth.
    3. Plaster Substrates: Verify that plaster is fully cured.
    4. Spray-Textured Ceiling Substrates: Verify that surfaces are dry.
C. Proceed with coating application only after unsatisfactory conditions have been corrected; application of coating indicates acceptance of surfaces and conditions.
3.2 PREPARATION
A. Comply with manufacturer's written instructions and recommendations in "MPI Manual" applicable to substrates indicated.
B. Remove hardware, covers, plates, and similar items already in place that are removable and are not to be painted. If removal is impractical or impossible because of size or weight of item, provide surface-applied protection before surface preparation and painting.
    1. After completing painting operations, use workers skilled in the trades involved to reinstall items that were removed. Remove surface-applied protection if any.

C. Clean substrates of substances that could impair bond of paints, including dust, dirt, oil, grease, and incompatible paints and encapsulants.
    1. Remove incompatible primers and reprime substrate with compatible primers or apply tie coat as required to produce paint systems indicated.
D. Concrete Substrates: Remove release agents, curing compounds, efflorescence, and chalk. Do not paint surfaces if moisture content or alkalinity of surfaces to be painted exceeds that permitted in manufacturer's written instructions.
    1. Concrete Floors: Remove oil, dust, grease, dirt, and other foreign materials. Comply with SSPC-SP-13/NACE 6 or ICRI 03732.
E. Masonry Substrates: Remove efflorescence and chalk. Do not paint surfaces if moisture content or alkalinity of surfaces or mortar joints exceed that permitted in manufacturer's written instructions.

F. Steel Substrates: Remove rust, loose mill scale, and shop primer, if any. Clean using methods recommended in writing by paint manufacturer.
G. Galvanized-Metal Substrates: Remove grease and oil residue from galvanized sheet metal fabricated from coil stock by mechanical methods to produce clean, lightly etched surfaces that promote adhesion of subsequently applied paints.
H. Aluminum Substrates: Remove loose surface oxidation.
I. Wood Substrates:
    1. Scrape and clean knots, and apply coat of knot sealer before applying primer.
    2. Sand surfaces that will be exposed to view, and dust off.
    3. Prime edges, ends, faces, undersides, and backsides of wood.
    4. After priming, fill holes and imperfections in the finish surfaces with putty or plastic wood filler. Sand smooth when dried.
J. Cotton or Canvas Insulation Covering Substrates: Remove dust, dirt, and other foreign material that might impair bond of paints to substrates.
3.3 APPLICATION
A. Apply paints according to manufacturer's written instructions and to recommendations in "MPI Manual."
    1. Use applicators and techniques suited for paint and substrate indicated.
    2. Paint surfaces behind movable equipment and furniture same as similar exposed surfaces. Before final installation, paint surfaces behind permanently fixed equipment or furniture with prime coat only.

I-FANG LIN BROYLES
REGISTERED ARCHITECT
No. 7001
July 11, 2023
STATE OF NEVADA

IZ design studio
design . . . sustainability . . . architecture.

tel. 702.441.0026
fax. 702.475.4755
www.izdesignstudio.com

7229 W. Sahara Ave Suite 120
Las Vegas, NV 89117
Nevada

Sheet Name
SPECIFICATIONS

SNHD

Project Name
SNHD BEHAVIORAL HEALTH 2
278 S. DECATUR BLVD
LAS VEGAS, NV 89107

DELTA NO.	REVISION NO.	DESCRIPTION	DATE

Project Number 21479
Date 08.02.2023
Drawn By KC
Checked By IB

SP100

SPECIFICATION

SECTION 09 91 23 - INTERIOR PAINTING - CONTINUED

3. Paint front and backsides of access panels, removable or hinged covers, and similar hinged items to match exposed surfaces.
4. Do not paint over labels of independent testing agencies or equipment name, identification, performance rating, or nomenclature plates.
5. Primers specified in painting schedules may be omitted on items that are factory primed or factory finished if acceptable to topcoat manufacturers.

B. If undercoats or other conditions show through topcoat, apply additional coats until cured film has a uniform paint finish, color, and appearance.
C. Apply paints to produce surface films without cloudiness, spotting, holidays, laps, brush marks, roller tracking, runs, sags, ropiness, or other surface imperfections. Cut in sharp lines and color breaks.
D. Painting Fire Suppression, Plumbing, HVAC, Electrical, Communication, and Electronic Safety and Security Work:

1. Paint the following work where exposed in equipment rooms:
   a. Equipment, including panelboards.
   b. Uninsulated metal piping.
   c. Uninsulated plastic piping.
   d. Pipe hangers and supports.
   e. Metal conduit.
   f. Plastic conduit.
   g. Tanks that do not have factory-applied final finishes.
   h. Duct, equipment, and pipe insulation having cotton or canvas insulation covering or other paintable jacket material.
2. Paint the following work where exposed in occupied spaces:
   a. Equipment, including panelboards.
   b. Uninsulated metal piping.
   c. Uninsulated plastic piping.
   d. Pipe hangers and supports.
   e. Metal conduit.
   f. Plastic conduit.
   g. Duct, equipment, and pipe insulation having cotton or canvas insulation covering or other paintable jacket material.
   h. Other items as directed by Architect.
3. Paint portions of internal surfaces of metal ducts, without liner, behind air inlets and outlets that are visible from occupied spaces.

3.4 FIELD QUALITY CONTROL
A. Dry Film Thickness Testing: Owner may engage the services of a qualified testing and inspecting agency to inspect and test paint for dry film thickness.

1. Contractor shall touch up and restore painted surfaces damaged by testing.
2. If test results show that dry film thickness of applied paint does not comply with paint manufacturer's written recommendations, Contractor shall pay for testing and apply additional coats as needed to provide dry film thickness that complies with paint manufacturer's written recommendations.

3.5 CLEANING AND PROTECTION
A. At end of each workday, remove rubbish, empty cans, rags, and other discarded materials from Project site.
B. After completing paint application, clean spattered surfaces. Remove spattered paints by washing, scraping, or other methods. Do not scratch or damage adjacent finished surfaces.
C. Protect work of other trades against damage from paint application. Correct damage to work of other trades by cleaning, repairing, replacing, and refinishing, as approved by Architect, and leave in an undamaged condition.
D. At completion of construction activities of other trades, touch up and restore damaged or defaced painted surfaces.

3.6 INTERIOR PAINTING SCHEDULE
A. CMU Substrates:

1. Water-Based Light Industrial Coating System - Semigloss:
   a. Block Filler: Block filler, latex, interior/exterior.
   b. Intermediate Coat: Light industrial coating, interior, water based, matching topcoat.
   c. Topcoat: Light industrial coating, interior, water based, semigloss: Pre-Catalyzed Water Based Epoxy, Semigloss.

B. Metal Substrates (Aluminum, Steel, Galvanized Steel):

1. Water-Based Light Industrial Coating System:
   a. Prime Coat: Primer, rust-inhibitive, water based.
   b. Intermediate Coat: Light industrial coating, interior, water based, matching topcoat.
   c. Topcoat: Light industrial coating, interior, water based, semigloss: Pre-Catalyzed Water Based Epoxy, Semigloss.

C. Gypsum Board Substrates:

1. Water-Based Light Industrial Coating System:
   a. Prime Coat: PVA Primer sealer, latex, interior.
   b. Intermediate Coat: Light industrial coating, interior, water based, matching topcoat.
   c. Topcoat: Light industrial coating, interior, water based, semigloss: Pre-Catalyzed Water Based Epoxy, Semigloss.

END OF SECTION 09 91 23

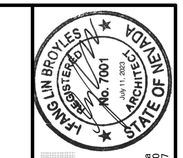

IZ design studio
design . . sustainability . . architecture .
tel. 702.441.0026
fax. 702.475.4755
www.izdesignstudio.com
7229 W. Sahara Ave Suite 120
Las Vegas, NV 89117
Nevada

Sheet Name
SPECIFICATIONS

Project Name
SNHD BEHAVIORAL HEALTH 2
278 S. DECATUR BLVD
LAS VEGAS, NV 89107

DELTA NO.	REVISION NO.	DESCRIPTION	DATE

Project Number	21479
Date	08.02.2023
Drawn By	KC
Checked By	IB

SP101

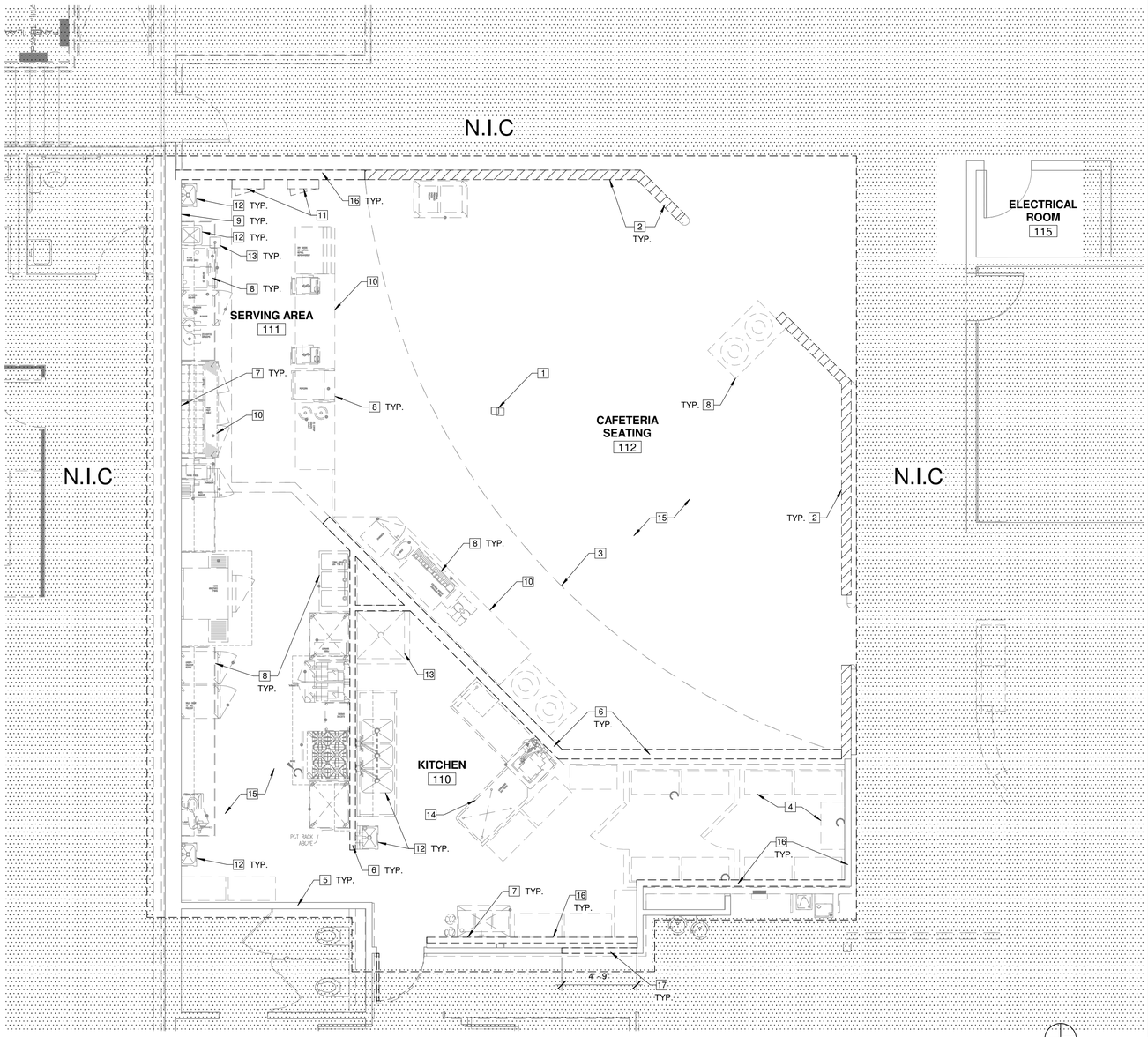

1 LEVEL 1 - DEMOLITION FLOOR PLAN
1/4" = 1'-0"

DEMOLITION NOTES

A ALL WORK PERFORMED ON THIS BUILDING SHALL BE IN COMPLIANCE WITH ALL PERTINENT CODES, RULES, ORDINANCES AND REGULATIONS OF THE LOCAL AND STATE GOVERNING AUTHORITIES.

B ALL WORK PERFORMED AND IN CONNECTION WITH THESE DRAWINGS AND SPECIFICATIONS SHALL BE IN STRICT COMPLIANCE WITH THE LATEST OSHA SAFETY AND HEALTH STANDARDS MLS ELEC. SAFETY HANDBOOK #GS-11294.

C THESE DRAWINGS, BY THEIR NATURE, CANNOT REVEAL ALL CONDITIONS THAT EXIST ON THE SITE. SHOULD CONDITIONS BE FOUND TO VARY SUBSTANTIALLY FROM THESE DOCUMENTS, NOTIFY OWNER AND ARCHITECT IMMEDIATELY IN WRITING.

D THE CONTRACTOR SHALL VERIFY ALL EXISTING CONDITIONS WITHIN THE DEMOLITION AREAS. REPORT ANY DISCREPANCIES FOUND TO THE CONSTRUCTION MANAGER FOR CLARIFICATION BEFORE PROCEEDING.

E REMOVE ALL EXISTING ITEMS SHOWN WITH DASHED LINE. REPAIR WALL AND FLOOR FINISHES TO MATCH ADJACENT SURFACES AT AREAS OF REMOVAL OR SCHEDULED NEW SURFACES AS REQUIRED

F SEE PLUMBING, HVAC AND ELECTRICAL DRAWINGS FOR REMOVAL WORK ASSOCIATED WITH THOSE TRADES.

G PROTECT EXISTING STRUCTURE, WALLS, CEILINGS, DOORS, FIXTURES, ETC. DURING DEMOLITION.

H PROTECT ALL FEATURES THAT ARE TO REMAIN. REFINISH TO LIKE NEW ANY AREAS DAMAGED DURING CONSTRUCTION.

I ALL CUTTING, DEMOLITION AND PATCHING OF EXISTING AND/OR NEW CONSTRUCTION OR EQUIPMENT IS TO BE PERFORMED BY THE CONTRACTOR WHO IS TO SUPPLY AND INSTALL THE NEW CONSTRUCTION AND/OR EQUIPMENT.

J WHERE DEMOLITION OF EXISTING CONSTRUCTION AND/OR EQUIPMENT OCCURS, PATCH AND REPAIR FLOOR, WALL AND CEILING CONSTRUCTION AND/OR FINISHES TO MATCH ADJACENT CONSTRUCTION AND/OR FINISHES.

K NOTIFY PROPERTY MANAGEMENT PRIOR TO THE DISABLING OF ANY FIRE ALARM DEVICES. ALL FIRE ALARM DEVICES THAT ARE NOT DISABLED BUT TEMPORARILY REMOVED FROM CEILINGS OR WALLS AS A RESULT OF SELECTIVE DEMOLITION SHOULD BE PROPERLY SUSPENDED ABOVE CEILING TO PREVENT DAMAGE OR FALSE ALARMS DURING CONSTRUCTION (IN NO CASE SHALL DEVICE BE SUSPENDED BY ITS OWN ALARM WIRING)

L INFILL ALL EXISTING FLOOR PENETRATIONS AND PREPARE FLOOR FOR NEW FLOOR FINISH INSTALLATION

KEY NOTES

#

1 EXISTING COLUMN TO REMAIN; PROTECT DURING CONSTRUCTION
2 DEMOLISH LOW WALL AND GLASS PARTITIONS, TYP.
3 CEILING SOFFIT LINE ABOVE
4 GENERAL CONTRACTOR TO REMOVE WALK-IN COOLER AND DISCONNECT ALL UTILITIES. SEE MPE DRAWINGS FOR MORE INFORMATION
5 DEMOLISH EXISTING FINISHES AND GYPSUM BOARD FOR WALL EXTENSION, TYP.
6 DEMOLISH WALL AND ALL UTILITIES, TYP. SEE ME DRAWINGS FOR MORE INFORMATION
7 REMOVE ALL UTILITY OUTLET ON WALL, TYP.
8 KITCHEN EQUIPMENT TO BE REMOVED BY OWNER PRIOR TO CONSTRUCTION, TYP.
9 DEMOLISH WALL FINISH AND GYPSUM BOARD IN KITCHEN, TYP.
10 DEMOLISH EXISTING COUNTER AND CASEWORK. DISCONNECT ALL UTILITIES. SEE MPE DRAWINGS FOR MORE INFORMATION
11 DEMOLISH EXISTING ELECTRICAL PANELS; SEE ELECTRICAL DRAWINGS FOR MORE INFORMATION
12 DEMOLISH SINK, TYP.
13 DEMOLISH FLOOR SINK
14 DEMOLISH DISHWASHER VENT HOOD AND ENTIRE ASSEMBLY
15 DEMOLISH FLOOR TILE AND TILE BASE, TYP. WITHIN SCOPE OF WORK
16 DEMOLISH EXISTING WALL AND BUILD THE NEW 6" STUDS WALL AT THE SAME LOCATION
17 DEMOLISH WALL FOR FUTURE EXIT DOOR

DEMOLITION LEGEND

EXISTING TO REMAIN

EXISTING TO BE DEMOLISHED

EXISTING LOW WALL TO BE DEMOLISHED

FANG LIN BROYLES
REGISTERED ARCHITECT
No. 7001
July 11, 2023
STATE OF NEVADA

IZ design studio
design . . sustainability . . architecture.
tel. 702 441 0026
fax. 702. 475. 4755
www.izdesignstudio.com
7229 W. Sahara Ave Suite 120
Las Vegas, NV 89117

DEMOLITION FLOOR PLAN
SNHD
SNHD BEHAVIORAL HEALTH 2
278 S. DECATUR BLVD
LAS VEGAS, NV 89107

DELTA NO.	REVISION NO.	DESCRIPTION	DATE

Sheet Name
Project Name

Project Number	21479
Date	08.02.2023
Drawn By	KC
Checked By	IB

AD101

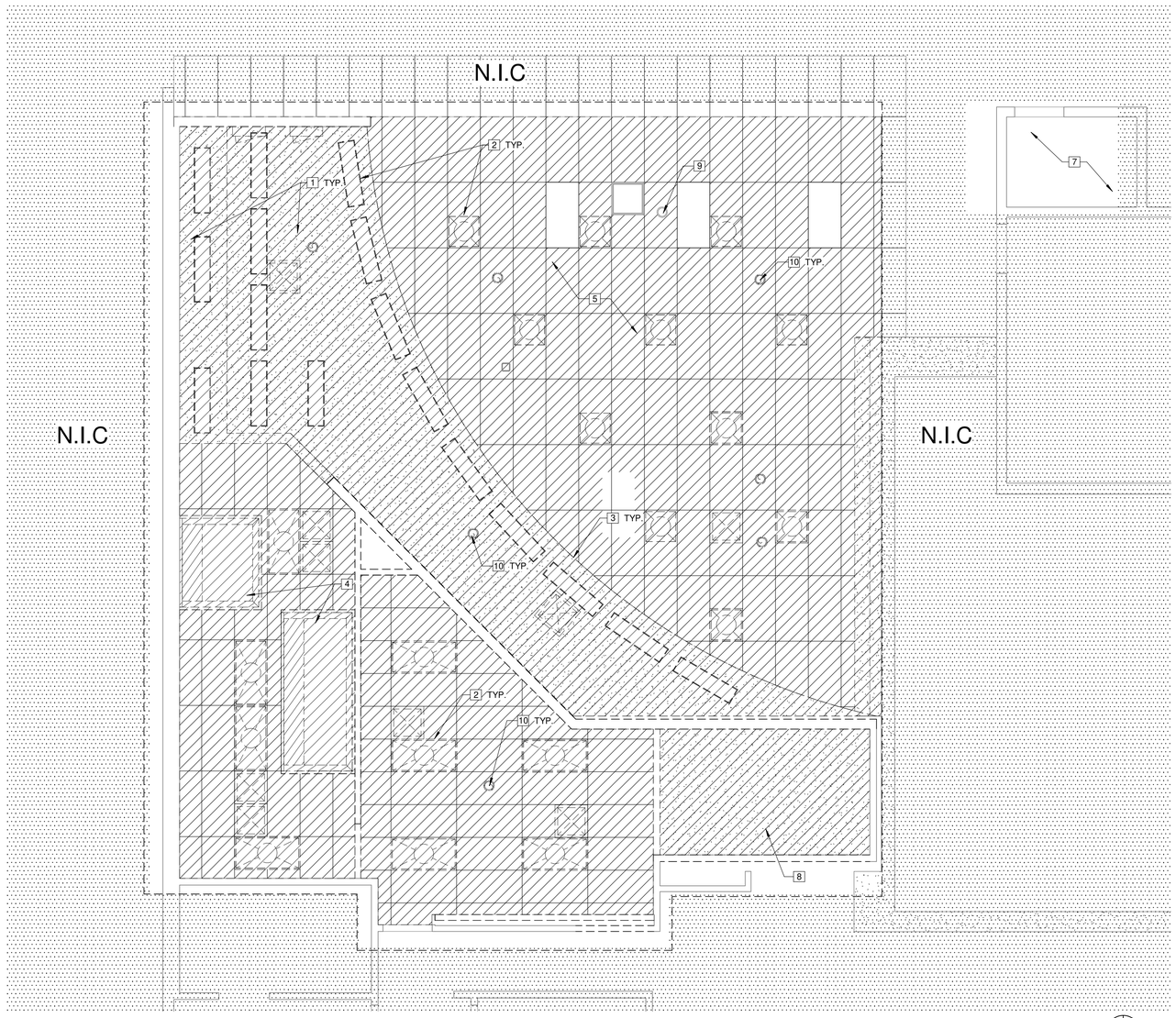

1 LEVEL 1 - DEMOLITION REFLECTED CELING PLAN
1/4" = 1'-0"

DEMOLITION RCP NOTES

A ALL WORK PERFORMED ON THIS BUILDING SHALL BE IN COMPLIANCE WITH ALL PERTINENT CODES, RULES, ORDINANCES AND REGULATIONS OF THE LOCAL AND STATE GOVERNING AUTHORITIES.

B ALL WORK PERFORMED AND IN CONNECTION WITH THESE DRAWINGS AND SPECIFICATIONS SHALL BE IN STRICT COMPLIANCE WITH THE LATEST OSHA SAFETY AND HEALTH STANDARDS MLS ELEC. SAFETY HANDBOOK #GS-11294.

C THESE DRAWINGS, BY THEIR NATURE, CANNOT REVEAL ALL CONDITIONS THAT EXIST ON THE SITE. SHOULD CONDITIONS BE FOUND TO VARY SUBSTANTIALLY FROM THESE DOCUMENTS, NOTIFY OWNER AND ARCHITECT IMMEDIATELY IN WRITING.

D THE CONTRACTOR SHALL VERIFY ALL EXISTING CONDITIONS WITHIN THE DEMOLITION AREAS. REPORT ANY DISCREPANCIES FOUND TO THE CONSTRUCTION MANAGER FOR CLARIFICATION BEFORE PROCEEDING.

E REMOVE ALL EXISTING ITEMS SHOWN WITH DASHED LINE. REPAIR WALL AND FLOOR FINISHES TO MATCH ADJACENT SURFACES AT AREAS OF REMOVAL OR SCHEDULED NEW SURFACES AS REQUIRED

F SEE PLUMBING, HVAC AND ELECTRICAL DRAWINGS FOR REMOVAL WORK ASSOCIATED WITH THOSE TRADES.

G PROTECT EXISTING STRUCTURE, WALLS, CEILINGS, DOORS, FIXTURES, ETC. DURING DEMOLITION.

H PROTECT ALL FEATURES THAT ARE TO REMAIN. REFINISH TO LIKE NEW ANY AREAS DAMAGED DURING CONSTRUCTION.

I ALL CUTTING, DEMOLITION AND PATCHING OF EXISTING AND/OR NEW CONSTRUCTION OR EQUIPMENT IS TO BE PERFORMED BY THE CONTRACTOR WHO IS TO SUPPLY AND INSTALL THE NEW CONSTRUCTION AND/OR EQUIPMENT.

J WHERE DEMOLITION OF EXISTING CONSTRUCTION AND/OR EQUIPMENT OCCURS, PATCH AND REPAIR FLOOR, WALL AND CEILING CONSTRUCTION AND/OR FINISHES TO MATCH ADJACENT CONSTRUCTION AND/OR FINISHES.

K NOTIFY PROPERTY MANAGEMENT PRIOR TO THE DISABLING OF ANY FIRE ALARM DEVICES. ALL FIRE ALARM DEVICES THAT ARE NOT DISABLED BUT TEMPORARILY REMOVED FROM CEILINGS OR WALLS AS A RESULT OF SELECTIVE DEMOLITION SHOULD BE PROPERLY SUSPENDED ABOVE CEILING TO PREVENT DAMAGE OR FALSE ALARMS DURING CONSTRUCTION (IN NO CASE SHALL DEVICE BE SUSPENDED BY ITS OWN ALARM WIRING)

L INFILL ALL EXISTING FLOOR PENETRATIONS AND PREPARE FLOOR FOR NEW FLOOR FINISH INSTALLATION

KEY NOTES

#

1 DEMOLISH GYPSUM BOARD CEILING AND SOFFIT, TYP.
2 DEMOLISH EXISTING LIGHTING, TYP.
3 DEMOLISH EXISTING SOFFIT, TYP.
4 DEMOLISH KITCHEN HOOD AND DUCT ASSEMBLY TO THE ROOF AND PATCH ROOF
5 EXISTING ACT CEILING AND GRID TO BE DEMOLISHED
6 DEMOLISH DISHWASHER HOOD AND DUCT ASSEMBLY TO THE ROOF AND PATCH ROOF
7 SEE ELECTRICAL DRAWINGS FOR SCOPE OF WORK
8 DEMOLISH WALK-IN COOLER AND ALL LIGHTING AND ASSOCIATE UTILITY
9 EXISTING SPEAKER TO REMAIN, PROTECT IN PLACE DURING CONSTRUCTION.
10 EXISTING SPEAKER TO BE RELOACED. SEE RCP FOR NEW LOCATIONS

DEMOLITION LEGEND

DEMOLISH GYPSUM BOARD CEILING
DEMOLISH 2X4 COMPOUND CEILING
DEMOLISH DIFFUSER
DEMOLISH 2x2 TROFFER LIGHT
EXISTING DIFFUSER TO REMAIN
DEMOLISH 1X4 LIGHT
DEMOLISH 2X4 TROFFER LIGHT
DEMOLISH KITCHEN VENT HOOD
RELOCATE EXISTING SPEAKER

FRANKLIN BROYLES REGISTERED ARCHITECT No. 7001 July 11, 2023 STATE OF NEVADA

IZ design studio
design . . sustainability . . architecture.
tel. 702 441 0026
fax. 702. 475. 4755
www.izdesignstudio.com
7229 W. Sahara Ave Suite 120
Las Vegas, NV 89117

REFLECTED CEILING DEMOLITION PLAN

SNHD BEHAVIORAL HEALTH 2
278 S. DECATUR BLVD
LAS VEGAS, NV 89107

DELTA NO.	REVISION NO.	DESCRIPTION	DATE

Sheet Name
Project Name

Project Number	21479
Date	08.02.2023
Drawn By	KC
Checked By	IB

AD300

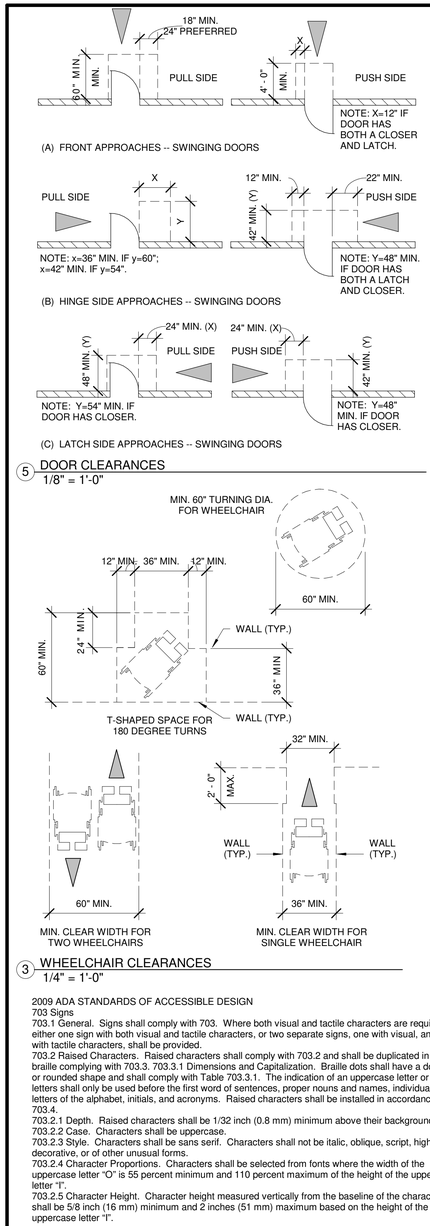

5 DOOR CLEARANCES
1/8" = 1'-0"

3 WHEELCHAIR CLEARANCES
1/4" = 1'-0"

2009 ADA STANDARDS OF ACCESSIBLE DESIGN
703 Signs
703.1 General. Signs shall comply with 703. Where both visual and tactile characters are required, either one sign with both visual and tactile characters, or two separate signs, one with visual, and one with tactile characters, shall be provided.
703.2 Raised Characters. Raised characters shall comply with 703.2 and shall be duplicated in braille complying with 703.3. 703.3.1 Dimensions and Capitalization. Braille dots shall have a domed or rounded shape and shall comply with Table 703.3.1. The indication of an uppercase letter or letters shall only be used before the first word of sentences, proper nouns and names, individual letters of the alphabet, initials, and acronyms. Raised characters shall be installed in accordance with 703.4.
703.2.1 Depth. Raised characters shall be 1/32 inch (0.8 mm) minimum above their background.
703.2.2 Case. Characters shall be uppercase.
703.2.3 Style. Characters shall be sans serif. Characters shall not be italic, oblique, script, highly decorative, or of other unusual forms.
703.2.4 Character Proportions. Characters shall be selected from fonts where the width of the uppercase letter "O" is 55 percent minimum and 110 percent maximum of the height of the uppercase letter "I".
703.2.5 Character Height. Character height measured vertically from the baseline of the character shall be 5/8 inch (16 mm) minimum and 2 inches (51 mm) maximum based on the height of the uppercase letter "I".

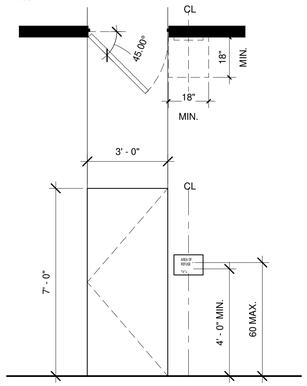

2 ADA SIGNAGE STANDARDS
3/8" = 1'-0"

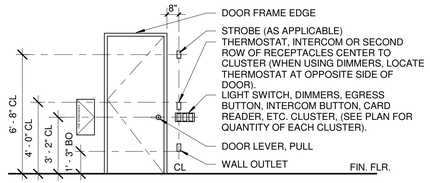

4 MOUNTING HEIGHTS
1/4" = 1'-0"

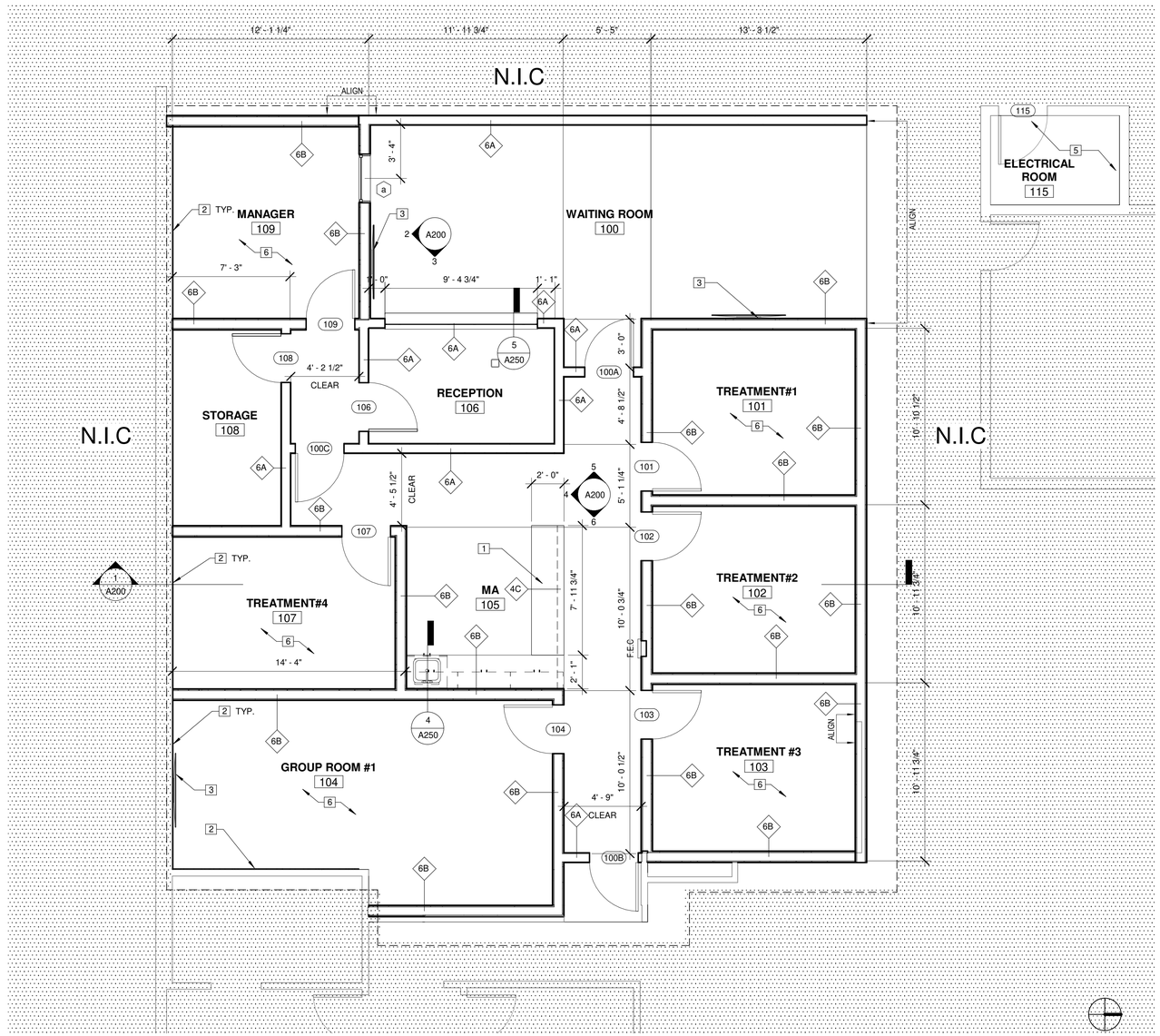

1 LEVEL 1 - FLOOR PLAN
1/4" = 1'-0"

GENERAL NOTES

A TAPE AND SAND GYPSUM BOARD ON ALL WALLS UNLESS NOTED OTHERWISE.
B COORDINATE AND VERIFY LOCATIONS OF ALL ELECTRICAL CONDUITS AND CIRCUITS WITH ELECTRICAL DRAWINGS.
C COORDINATE AND VERIFY LOCATIONS OF ALL WATER AND SEWER LINES CONNECTIONS WITH PLUMBING DRAWINGS AND EXISTING CONDITIONS.
D ALL DOORS IN MEANS OF EGRESS SHALL BE OPERABLE FROM THE INSIDE WITHOUT USE OF A KEY OR ANY SPECIAL KNOWLEDGE OR EFFORT.
E ALL DIMENSIONS ARE TO FACE OF STUD UNLESS NOTED OTHERWISE.
F REFER TO ACCESSIBILITY DETAILS ON SHEET G100 FOR REQUIRED CLEARANCES
G REFER TO STRUCTURAL DRAWINGS FOR INFORMATION PERTAINING TO STRUCTURE
H NEW WALLS ARE SHOWN IN A HEAVY LINE WEIGHT

WALL TYPES LEGEND

SIZE
REMARKS
NEW WALL; REFER TO WALL TYPES ON SHEET A150
EXISTING TO REMAIN

KEY NOTES

#

1 34" A.F.F. MAX COUNTERTOP
2 (1) LAYERS OF 5/8" QUIETROCK 530 GYPSUM BOARD, TYP. OVER ACOUSTICAL SOUND BATTS
3 TV PROVIDED BY OWNER; GENERAL CONTRACTOR TO PROVIDE WALL BACKING AT 6'-6" A.F.F., TYP.
4 APPLY 5/8"GYP.BD.TO EXISTING STUDS.
5 SEE ELECTRICAL DRAWINGS FOR THE SCOPE OF WORK IN THE ELECTRICAL ROOM
6 ALL THE DATA AND ELECTRICAL OUTLETS SHALL HAVE INTERNAL INTUMESCENT PUTTY PAD. ANY GAPS BETWEEN ELECTRICAL BOXES AND WALLS SHOULD BE FILLED WITH FIBERGLASS AND SEALED WITH ACOUSTICAL SEALANT
7 ADD CARD READER TO THE EXISTING DOOR. SEE ELECTRICAL DRAWINGS FOR MORE INFORMATION. COORDINATE WITH OWNER FOR TYPE AND MODEL OF CARDERS ARE CURRENTLY IN USE AT THE FACILITIES
8 EXTEND METAL STUDS TO UNDERSDIE OF STRUCTURAL DECK AND INSTALL SOUND INSULATION. APPLY (2) LAYERS OF 5/8" QUIETROCK 530 GYPSUM BOARD

FRANK LIN BROYLES
REGISTERED ARCHITECT
No. 7001
July 11, 2005
STATE OF NEVADA

IZ design studio
design . . sustainability . . architecture.
tel. 702.441.0026
fax. 702.475.4755
www.izdesignstudio.com
7229 W. Sahara Ave Suite 120
Las Vegas, NV 89117
Nevada

FLOOR PLAN AND ACCESSIBILITY

SNHD
SNHD BEHAVIORAL HEALTH 2
278 S. DECATUR BLVD
LAS VEGAS, NV 89107

DELTA NO.	REVISION NO.	DESCRIPTION	DATE

Sheet Name
Project Name

Project Number	21479
Date	08.02.2023
Drawn By	KC
Checked By	IB

A100

DOOR SCHEDULE

NUMBER	PAIR	W	H	T	DOOR TYPE	DOOR MATL.	DOOR FINISH	FIRE RATING	FRAME TYPE	FRAME MATL.	FRAME FINISH	HARDWARE	REMARKS
100A		3' - 0"	7' - 0"	0' - 1 3/4"	A	SC/WD	PT-3		1	KD	PT-3	01	
100B		3' - 0"	7' - 0"	0' - 1 3/4"	A	STEEL	PT-3		1	KD	PT-3	01	
100C		3' - 0"	7' - 0"	0' - 1 3/4"	A	SC/WD	PT-3		1	KD	PT-3	01	
101		3' - 0"	7' - 0"	0' - 1 3/4"	B	STEEL	PT-3		2	STEEL	PT-3	01	SEE DETAIL 5/A150 AND 6/A150
102		3' - 0"	7' - 0"	0' - 1 3/4"	B	STEEL	PT-3		2	STEEL	PT-3	01	SEE DETAIL 5/A150 AND 6/A150
103		3' - 0"	7' - 0"	0' - 1 3/4"	B	STEEL	PT-3		2	STEEL	PT-3	01	SEE DETAIL 5/A150 AND 6/A150
104		3' - 0"	7' - 0"	0' - 1 3/4"	B	STEEL	PT-3		2	STEEL	PT-3	01	SEE DETAIL 5/A150 AND 6/A150
106		3' - 0"	7' - 0"	0' - 1 3/4"	A	SC/WD	PT-3		1	KD	PT-3	01	
107		3' - 0"	7' - 0"	0' - 1 3/4"	B	STEEL	PT-3		2	STEEL	PT-3	01	SEE DETAIL 5/A150 AND 6/A150
108		3' - 0"	7' - 0"	0' - 1 3/4"	A	SC/WD	PT-3		1	KD	PT-3	02	
109		3' - 0"	7' - 0"	0' - 1 3/4"	B	STEEL	PT-3		2	STEEL	PT-3	01	SEE DETAIL 5/A150 AND 6/A150

SC/WD: SOLID CORE/ WOOD DOOR SC/GL: SOLID CORE WITH GLASS KD: KNOCK-DOWN FRAME P: PAINT FINISH PL: PLASTIC HIGH-PRESSURE DECORATIVE LAMINATE
T:TEMPERED GLASS STEEL: ACOUSTICAL STEEL DOOR/FRAME

ACOUSTICAL SOUND DOOR CONTACT: JEREMY ZAMKE 562.695.0645x231

DOOR HARDWARE SET

MANUFACTURER ABBREVIATION: IVE- IVES YAL- YALE MFR-

HW SET: 01
DOORS: 100, 101, 102, 103, 104, 105
Provide each SGL door(s) with the following:

QTY		DESCRIPTION	CATALOG NUMBER	FINISH	MFR
3	EA	HINGE	5BB1 4.5 X 4.5	652	IVE
1	EA	ENTRY LOCK	LFIC-PB-5404LN X CONST CORE	626	YAL
1	EA	LFIC CORE	1210 MATCH BLDG STANDARD	626	YAL
1	EA	KICK PLATE	8400 10" X 2" LDW B-CS	630	IVE
1	EA	WALL STOP	WS406/407CCV	630	IVE
3	EA	SILENCER	SR64/65 AS REQUIRED	GRY	IVE

HW SET: 02
DOOR: 108
Provide each SGL door(s) with the following:

QTY		DESCRIPTION	CATALOG NUMBER	FINISH	MFR
3	EA	HINGE	5BB1 4.5 X 4.5	652	IVE
1	EA	STOREROOM LOCK	LFIC-PB-5405LN X CONST CORE	626	YAL
1	EA	LFIC CORE	1210 MATCH BLDG STANDARD	626	YAL
1	EA	KICK PLATE	8400 10" X 2" LDW B-CS	630	IVE
1	EA	WALL STOP	WS406/407CCV	630	IVE
3	EA	SILENCER	SR64/65 AS REQUIRED	GRY	IVE

DOOR FRAME TYPES

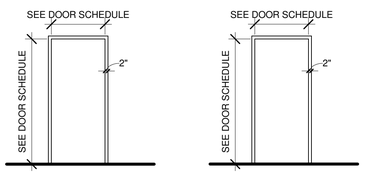

TYPE 1
WELD STEEL FRAME

TYPE 2
ACOUSTICAL STEEL FRAME

DOOR PANEL TYPES

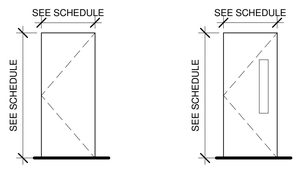

TYPE A
FLUSH DOOR

TYPE B
ACOUSTICAL DOOR + VISUAL BLIND
SEE SPEC. 08 14 18

ROOM FINISH SCHEDULE

NUMBER	NAME	FLOOR FINISH	BASE FINISH	WALL FINISH	CEILING FINISH	COMMENTS
100	WAITING ROOM	LVT-1	RB-1	PT-1/PT-2	SEE RCP	
101	TREATMENT#1	CPT-1	RB-1	PT-1	SEE RCP	
102	TREATMENT#2	CPT-1	RB-1	PT-1	SEE RCP	
103	TREATMENT #3	CPT-1	RB-1	PT-1	SEE RCP	
104	GROUP ROOM #1	CPT-1	RB-1	PT-1	SEE RCP	
105	MA	LVT-1	RB-1	PT-1	SEE RCP	
106	RECEPTION	LVT-1	RB-1	PT-1	SEE RCP	
107	TREATMENT#4	CPT-1	RB-1	PT-1	SEE RCP	
108	STORAGE	CPT-1	RB-1	PT-1	SEE RCP	
109	MANAGER	CPT-1	RB-1	PT-1	SEE RCP	

FINISH SCHEDULE

REF#	DESCRIPTION/CLASS	PRODUCT NAME	COLOR/FINISH	SIZE	SOURCE	CONTACT	NOTES
ACT-1	ACOUSTIC CEILING TILE	CIRRUS 533 SQUARE LAY-IN 15/16" CEILING GRID	WHITE	24"X48"	ARMSTRONG		
ACT-2	ACOUSTIC CEILING TILE WITH GYPSUM BACKER	QuietTile:ARMSTRONG 533 CIRRUS AND VISCOELASTIC INTERNAL DAMPING LAYER	WHITE	24"X48"	KINETICS NOISE CONTROL	TADAMS@ACOUSTHETICS.COM	
CPT-1	CARPET	THOUGHT I0290; INSTALL ASHLAR	PERCEPTION 00750	24"X24"	PATCRAFT	SARAH NAVRAKAL (702)370-5884	
LVT-1	LUXURY VINYL TILE	NORTH RIDGE 6" 1207V; INSTALL IN RUNING BOND PATTERN	CABIN TIMER 02540		PATCRAFT	SARAH NAVRAKAL (702) 370-5884	
PL-1	PLASTIC LAMINATE	BASE/UPPER CABINETS	8829-58/GRAPHITE TWILL/MATTE FINISH		WILSONART		
PL-2	PLASTIC LAMINATE	FORMICA/IDEAL EDGE/ E12 DOUBLE RADIUS	8831-58/ELEMENTAL STONE		FORMICA		
PT-1	PAINT	ZERO VOC PAINT	WORLDLY GRAY SW 7043		SHERWIN WILLIAMS	JOHN.T.DUMESNIL@SHERWIN.COM	FIELD COLOR
PT-2	PAINT	ZERO VOC PAINT	AMAZING GRAY SW 7044		SHERWIN WILLIAMS	JOHN.T.DUMESNIL@SHERWIN.COM	ACCENT COLOR
PT-3	PAINT	ZERO VOC PAINT	INTELLECTUAL GRAY SW7045		SHERWIN WILLIAMS	JOHN.T.DUMESNIL@SHERWIN.COM	DOOR AND FRAMES
RB-1	RUBBER BASE	BASEWORKS THERMOSET RUBBER (TYPE TS)	PEBBLE	4"	TARKETT	SUSAN.JONES@TARKETT.COM	
SS-1	ACRYLIC COUNTERTOP	SOLID SURFACE	608 LIMED CONCRETE		FORMICA		

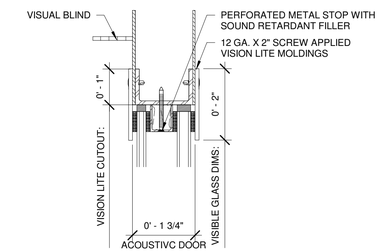

GLAZING MATERIAL AND DIMENTIONS SUBJECT TO SPECIFIED ACOUSTIC REQUIREMENTS; PLEASE CONSULT FACTORY FOR MORE INFORMATION

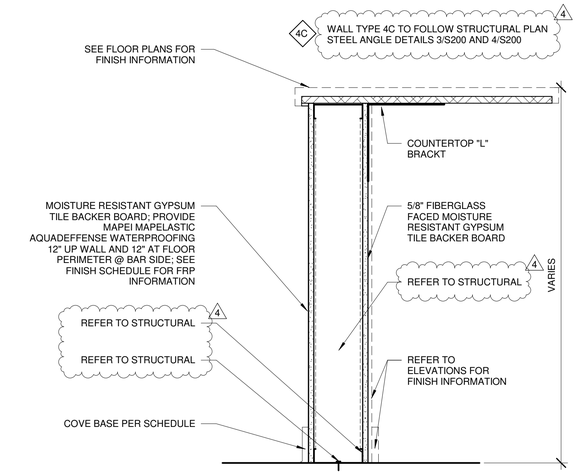

7 TYPE C - GYP. BOTH SIDES - LOW/ BAR WALL
1 1/2" = 1'-0"

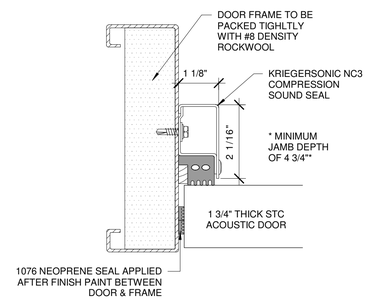

6 STC 45 FRAME DETAIL
6" = 1'-0"

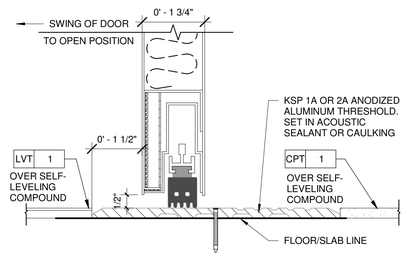

5 STC 45 DOOR BOTTOM
6" = 1'-0"

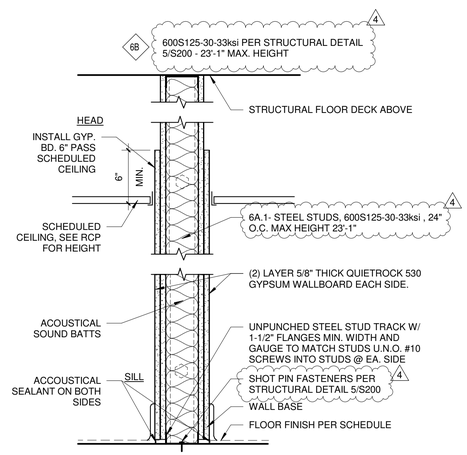

2 TYPE B - GYP. BOTH SIDES - BRACED WALL ACOUSTICAL WALL
1 1/2" = 1'-0"

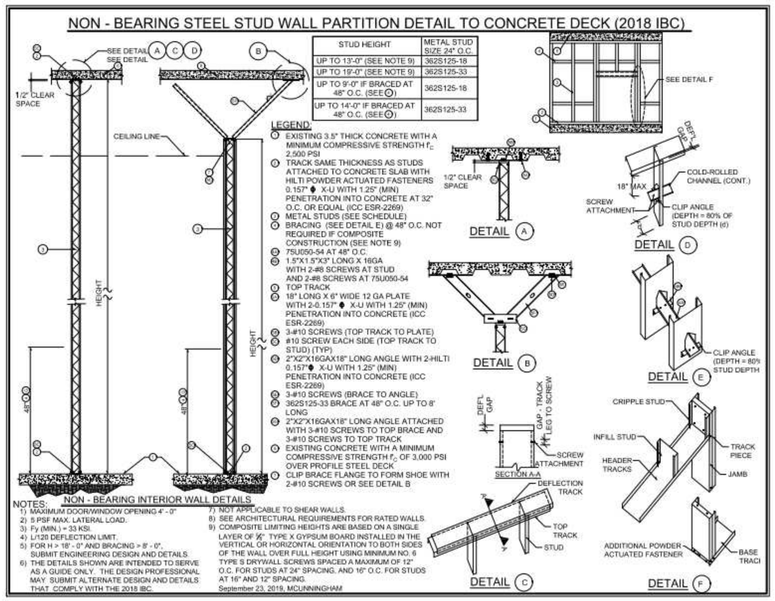

4 CITY OF LAS VEGAS - NON- BEARING STEEL WALL PARTITION DETAIL TO CONCRETE DECK (2018 IBC)
1/4" = 1'-0"

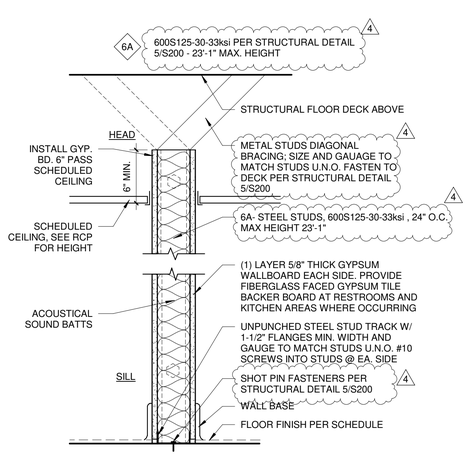

1 TYPE A - GYP. BOTH SIDES - BRACED WALL
1 1/2" = 1'-0"

FANG LIN BROYLES
REGISTERED ARCHITECT
NO. 7001
July 11, 2005
STATE OF NEVADA

IZ design studio
design . . sustainability . . architecture.
7229 W. Sahara Ave Suite 120
Las Vegas, NV 89117
tel. 702.441.0026
fax. 702.475.4755
www.izdesignstudio.com

SCHEDULES AND WALL TYPES
SNHD
SNHD BEHAVIORAL HEALTH 2
278 S. DECATUR BLVD
LAS VEGAS, NV 89107

DELTA NO.	REVISION NO.	DESCRIPTION	DATE
4	BID PHASE		09.28.2023

Sheet Name
Project Name

Project Number	21479
Date	08.02.2023
Drawn By	KC
Checked By	IB

A150

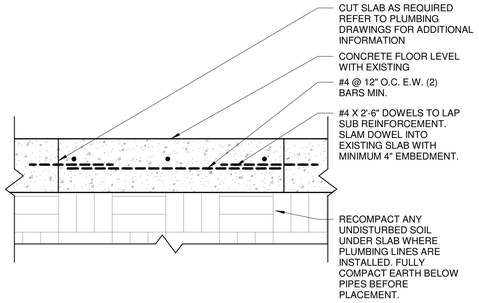

9 FLOOR TRENCH
1 1/2" = 1'-0"

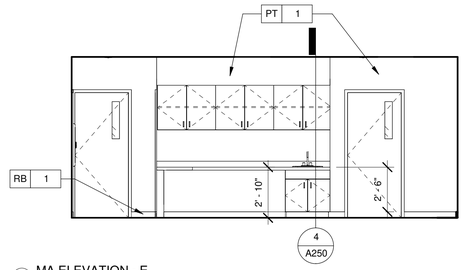

6 MA ELEVATION - E
1/4" = 1'-0"

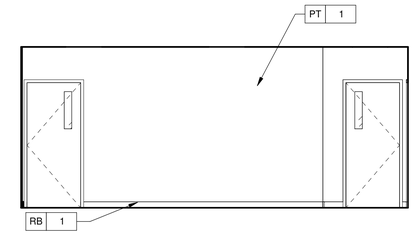

5 WAITING ROOM ELEVATION - W
1/4" = 1'-0"

NOTE:
CONTRACTOR SHALL COORDINATE LOCATIONS OF HORIZONTAL FASTENERS.

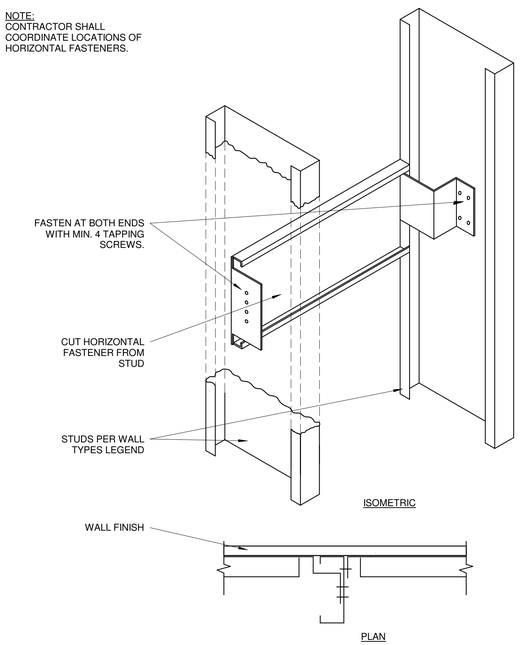

8 WALL BACKING
1/2" = 1'-0"

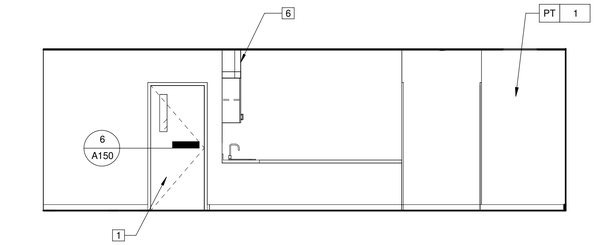

4 WAITING ROOM ELEVATION - S
1/4" = 1'-0"

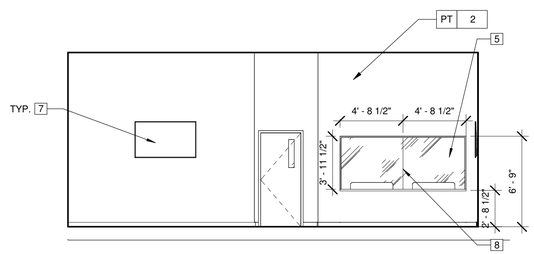

3 WAITING AREA ELEVATION -E
3/16" = 1'-0"

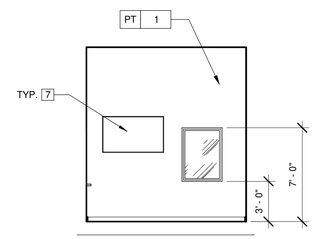

2 WAITING AREA ELEVATION -S
3/16" = 1'-0"

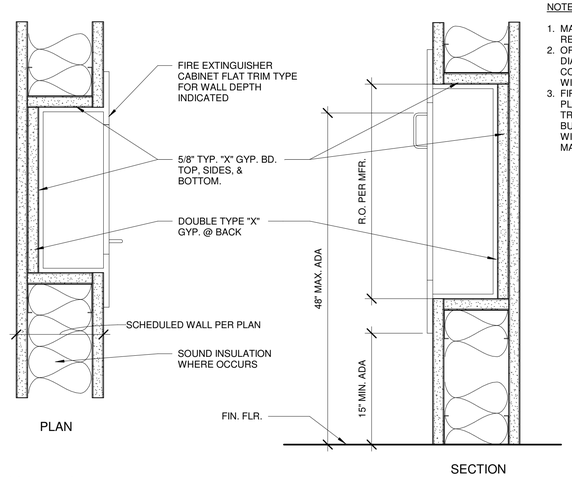

NOTES:

1. MAINTAIN PARTITION FIRE RESISTANCE INTEGRITY.
2. OPENING SIZE IS DIAGRAMMATIC ONLY; COORDINATE EXACT SIZE WITH CABINET SUBMITTAL.
3. FIRE EXTINGUISHER TO BE PLACED WITHIN 75'-0" OF TRAVEL THROUGHOUT BUILDING OR ACCORDANCE WITH LOCAL FIRE MARSHALL.

7 RECESSED F.E.C.
3" = 1'-0"

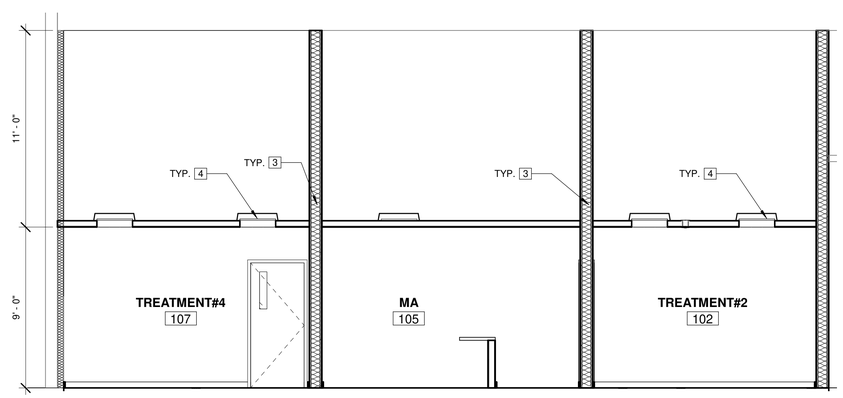

1 BUILDING SECTION
1/4" = 1'-0"

GENERAL NOTES

A ALL PLUMBING FIXTURES AND ACCESSORIES SIZE AND MOUNTING HEIGHT SHALL COMPLY WITH THE AMERICANS WITH DISABILITIES ACT (ada) AND AMERICAN NATIONAL STANDARDS INSTITUTE (ANSI) REQUIREMENTS

B REFER TO ACCESSIBILITIY REQUIREMENTS ON SHEET G100 FOR REQUIRED MOUNTING HEIGHTS. COORDINATE WIHT ADA, ANSI, AND ALL APPLICABLE CODE REQUIREMENTS.

C CONTRACTOR TO PROVIDE IN WALL SUPPORT FOR ACCESSORY AND MILLWORK MOUNTING PER MANUFACTURERS SPECIFICATIONS

D GRAB BAR AND SUPPORT SHALL RESIST 250 LB AND SHALL COMPLY WITH ALL ADA, ANSI, AND APPLICABLE CODE REQUIREMENTS

KEY NOTES

#

1 ACOUSTICAL DOOR, SEE DOOR SCHEDULE
2 FURNITURE BY OWNER, TYP.
3 FULL HEIGHT ACOUSTICAL PARTITION, SEE WALL TYPE FOR MORE INFORMATION
4 QUIETTILE LIGHT HOOD, TYP. ON ALL LIGHT FIXTURE IN GROUP ROOM, TREAT MENT ROOM, AND MANAGER ROOM
5 1/4" CLEAR POLYCARBONATE PANEL
6 CASEWORK SOFFIT
7 TV PROVIDED BY OWNER; GENERAL CONTRACTOR TO PROVIDE WALL BACKING AT 6'-6" A.F.F., TYP.
8 CLEAR SEALANT BETWEEN PANELS.

FRANKLIN BROYLES REGISTERED ARCHITECT NO. 7001 STATE OF NEVADA
July 11, 2023

IZ design studio
design . . sustainability . . architecture.
7229 W. Sahara Ave Suite 120
Las Vegas, NV 89117
tel. 702. 441. 0026
fax. 702. 475. 4755
www.izdesignstudio.com

INTERIOR ELEVATIONS AND SECTIONS
SNHD
SNHD BEHAVIORAL HEALTH 2
278 S. DECATUR BLVD
LAS VEGAS, NV 89107

DELTA NO.	REVISION NO.	DESCRIPTION	DATE

Sheet Name
Project Name

Project Number	21479
Date	08.02.2023
Drawn By	KC
Checked By	IB

A200

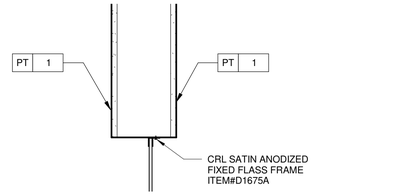

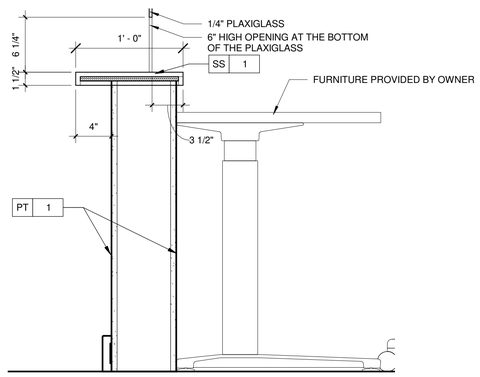

5 RECEPTION COUNTER
1 1/2" = 1'-0"

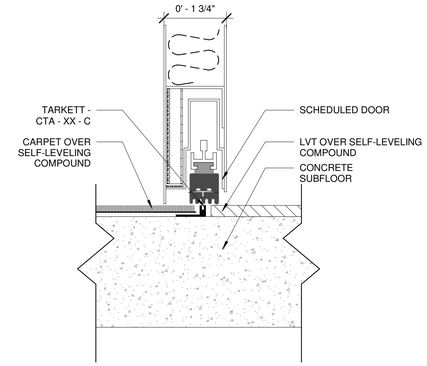

3 CARPET TO LVT TRANSITION
6" = 1'-0"

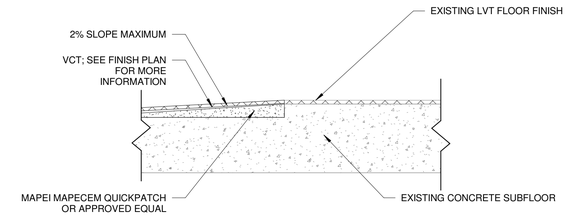

2 VCT TO SLOPED VCT TRANSITION
3" = 1'-0"

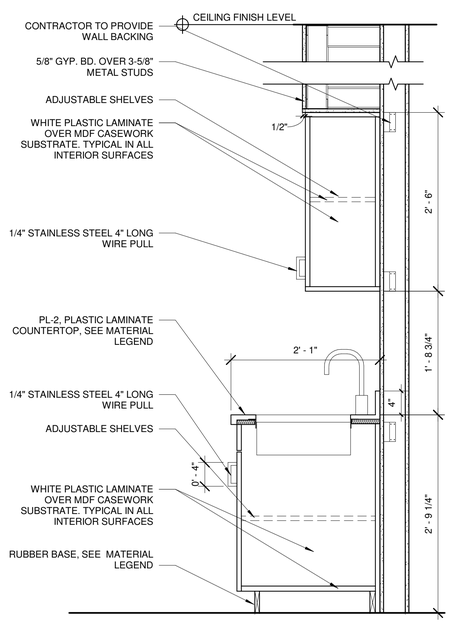

4 CASEWORK TYPICAL CABINET SECTION
1" = 1'-0"

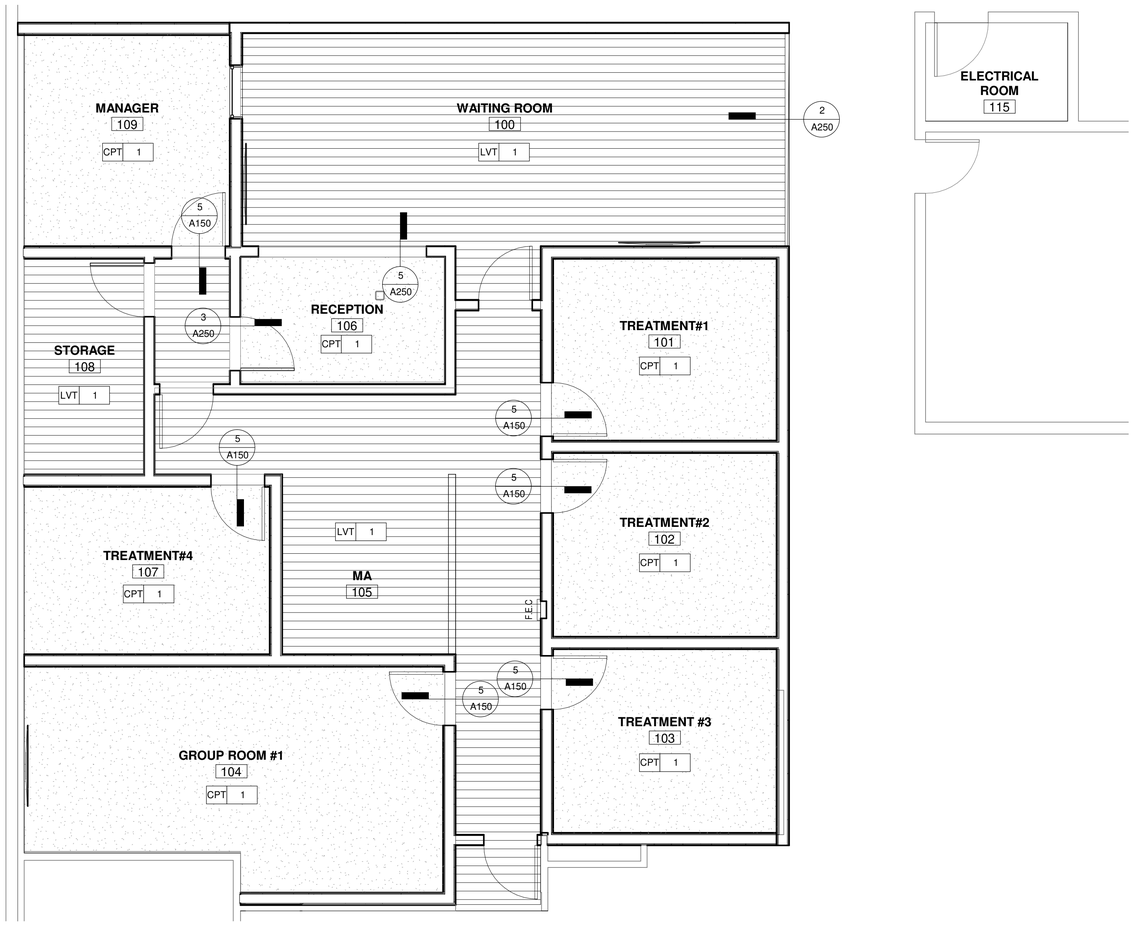

1 LEVEL 1 - FINISH FLOOR PLAN
1/4" = 1'-0"

GENERAL NOTES

A APPLY SELF-LEVELING COMPOUND PRIOR TO INSTALL OF THE NEW FLOORING

KEY NOTES

#

1 GC TO PROVIDE MAX 2% SLOPE FOR THE SLAB DEPRESSION; SEE DETAIL FOR MORE INFORMATION

FLOOR FINISH LEGEND

LVT-1 WITH RB-1

CPT-1 WITH RB-1

FRANK LIN BROYLES
REGISTERED ARCHITECT
No. 7001
July 11, 2023
STATE OF NEVADA

IZ design studio
design . . sustainability . . architecture .
tel. 702.441.0026
fax. 702.475.4755
www.izdesignstudio.com
7229 W. Sahara Ave Suite 120
Las Vegas, NV 89117
Nevada

FINISH FLOOR PLAN AND CASEWORK DETAILS

SNHD

SNHD BEHAVIORAL HEALTH 2

278 S. DECATUR BLVD
LAS VEGAS, NV 89107

DELTA NO.	REVISION NO.	DESCRIPTION	DATE

Sheet Name

Project Name

Project Number	21479
Date	08.02.2023
Drawn By	KC
Checked By	IB

A250

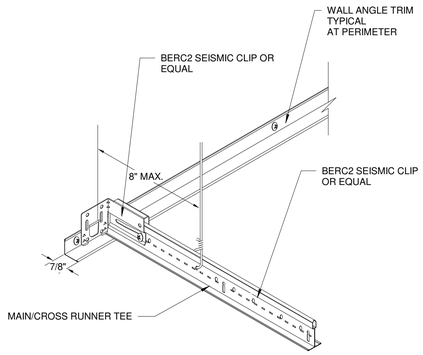

INSTALL PER ASTM C636

3 SEISMIC PERIMETER CLIP
N.T.S.

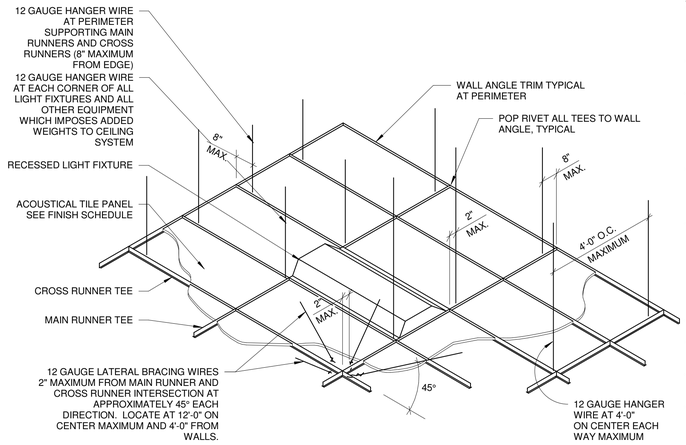

ICC ESR-1308

CEILING NOTES

- THE SUSPENDED CEILING SYSTEM, MECHANICAL DUCTWORK AND LIGHTING FIXTURES SHALL BE POSITIVELY ATTACHED FROM THE STRUCTURE ABOVE.
- HANGER WIRES ARE TO BE ATTACHED TO STRUCTURE ABOVE WITH AN APPROVED HANGER ATTACHMENT DEVICE.
- ALL LIGHTING FIXTURES SHALL BE POSITIVELY ATTACHED TO THE SUSPENDED CEILING SYSTEM. THE ATTACHMENT DEVICE SHALL HAVE A CAPACITY OF 100 PERCENT OF THE LIGHTING FIXTURE WEIGHT ACTING IN ANY DIRECTION.
- 12 GAUGE HANGER WIRE SHALL ATTACH THE GRID MEMBER TO THE STRUCTURE ABOVE WITHIN 2" OF EACH CORNER OF EACH FIXTURE. TANDEM FIXTURES MAY UTILIZE COMMON WIRES.
- LIGHT FIXTURES WEIGHING LESS THAN 56 POUNDS SHALL HAVE (2) 10 GAUGE HANGER WIRES CONNECTED FROM THE FIXTURE HOUSING TO THE STRUCTURE ABOVE. THESE WIRES MAY BE SLACK. LIGHT FIXTURES WEIGHING 56 POUNDS OR MORE SHALL BE SUPPORTED DIRECTLY FROM THE STRUCTURE ABOVE BY APPROVED HANGERS.
- 12 GAUGE VERTICAL HANGER WIRES WITH NOT LESS THAN 4 TIGHT TURNS.
- 12 GAUGE BRACING WIRES WITH 4 TIGHT TURNS. MAKE ALL TIGHT TURNS WITHIN A DISTANCE OF 1-1/2".
- SUSPENDED CEILING SHALL COMPLY WITH THE REQUIREMENTS ASTM C635 AND C636.
- SPLICES AND INTERSECTIONS OF RUNNERS SHALL BE ATTACHED WITH MECHANICAL INTERLOCKING CONNECTORS SUCH AS POP RIVETS, SCREWS, PINS, OR PLATES WITH BENT TABS OR OTHER APPROVED CONNECTORS.

2 SUSPENDED ACCOUSTICAL CEILING
N.T.S.

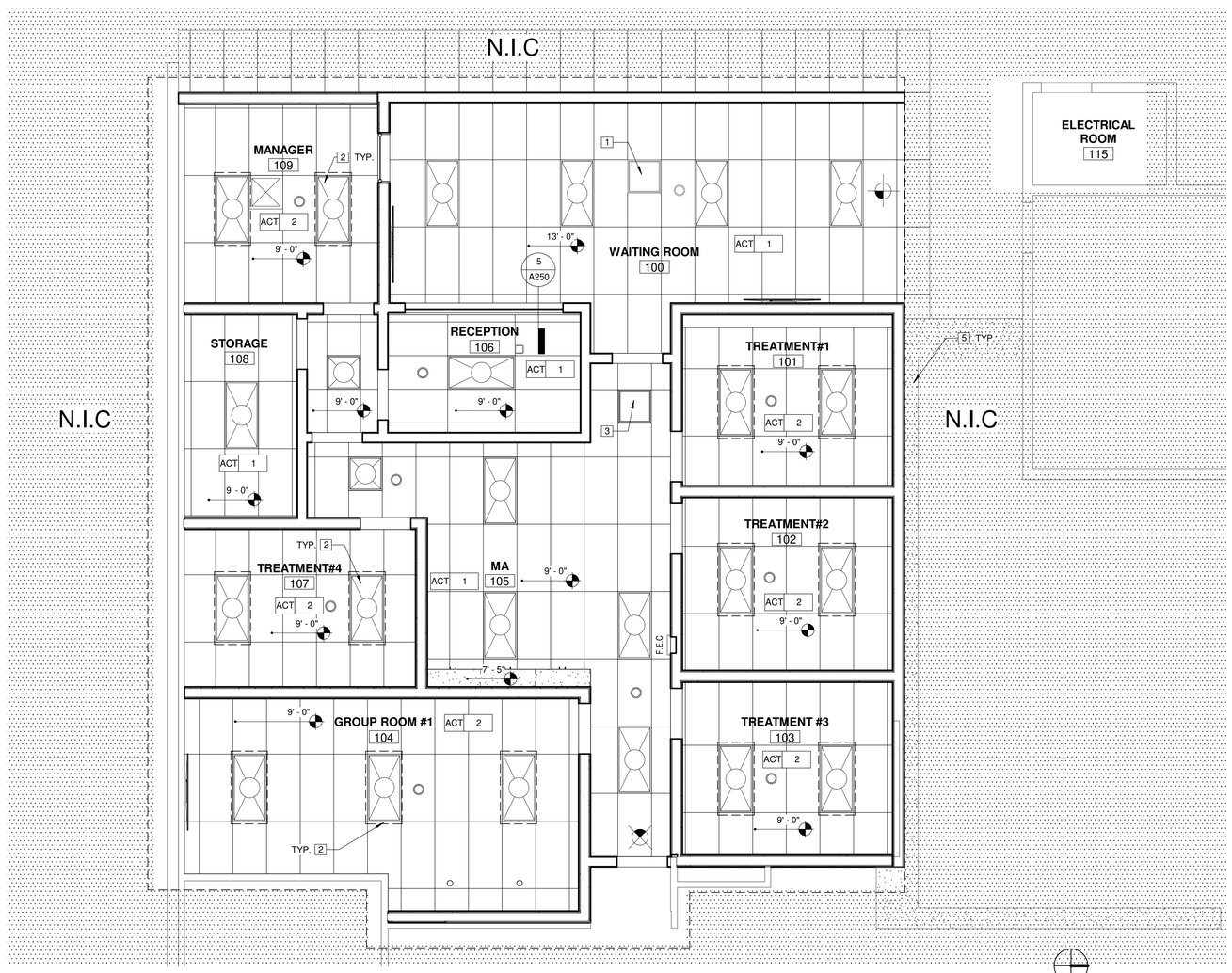

1 LEVEL 1 - REFLECTED CEILING PLAN
1/4" = 1'-0"

RCP NOTES

A CENTER LIGHT FIXTURES IN ROOMS U.N.O.
B COORDINATE AND VERIFY LOCATIONS OF ALL MECHANICAL GRILLS WITH MECHANICAL DRAWINGS.
C COORDINATE AND VERIFY LOCATIONS OF ALL LIGHTING FIXTURES WITH ELECTRICAL DRAWINGS AND ARCHITECTURAL DRAWINGS. NOTIFY ARCHITECT IN WRITING IF A CONFLICT EXISTS.
D PROVIDE SUFFICIENT SUPPORT FOR ALL LIGHTING FIXTURE AND CONCEALED EQUIPMENT.
E PROVIDE SEISMIC BRACING AT ALL SUSPENDED CEILINGS PER LOCAL CODE REQUIREMENTS.
F CONTRACTOR TO PROVIDE ACCESS PANELS AS REQUIRED AFTER THE INSTALLATION OF MECHANICAL DUCTS, PLUBMING, AND ELECTRICAL WORK. COORDINATE LOCATION OF PANELS WITH ARCHITECT.

KEY NOTES

#

1 EXISTING SOLAR TUBE TO REMAIN
2 QUIETTILE LIGHT HOOD, TYP. ON ALL LIGHT FIXTURE IN GROUP ROOM, TREAT MENT ROOM, AND MANAGER ROOM
3 RELOCATED SOLAR TUBE
4 NEW 2'X4' ACT SYSTEM TO MATCH EXISTING
5 REPAIR EXISTING GYP. BD. CEILING AS REQUIRED.TYP.

CEILING SYMBOLS

NEW 2' x 4' SUSPENDED CEILING TILE
SUPPLY DIFFUSER
RETURN DIFFUSER
2X2 LED; SEE ELECTRICAL DRAWINGS FOR MORE INFORMATION
2X4 LED; SEE ELECTRICAL DRAWINGS FOR MORE INFORMATION
SPEAKER
PENDANT
1X4 TROFFER
4" RECESSED DOWNLIGHT
EXIT SIGN
EMERGENCY LIGHT
W
WALL PACK FIXTURE

FRANCLIN BROYLES REGISTERED ARCHITECT No. 7001 July 11, 2005 STATE OF NEVADA

IZ design studio
design . . sustainability . . architecture.

tel. 702.441.0026
fax. 702.475.4755
www.izdesignstudio.com

7229 W. Sahara Ave Suite 120
Las Vegas, NV 89117
Nevada

REFLECTED CEILING PLAN

SNHD

SNHD BEHAVIORAL HEALTH 2

278 S. DECATUR BLVD
LAS VEGAS, NV 89107

DELTA NO.	REVISION NO.	DESCRIPTION	DATE

Sheet Name

Project Name

Project Number	21479
Date	08.02.2023
Drawn By	KC
Checked By	IB

A300

Sarnafil BUILDING TRUST Sika

20 Year System Warranty

Warranty Serial No.: WAR18-1550362

SIKA CORPORATION ROOFING WARRANTY FOR COMMERCIAL BUILDING

Building Owner: Southern Nevada Health District
Building Name: Southern Nevada Health District
Building Address: 280 South Decatur Boulevard, Las Vegas, NV 89107
Applicator: Eberhard Southwest roofing, 3995 West Dewey Drive, Las Vegas, NV 89118 Phone: (702) 873-2212

Date of Substantial Completion: 12/05/2017 Date of Inspection: 12/05/2017 By: David Conder

Building/Area Name	Used As	Area Warranted (Sq. Ft.)
Southern Nevada Health District	Commercial - Public Buildings	120,000

Sika Corporation warrants to the owner of the building described above ("Owner"), that subject to the terms, conditions, and limitations, including the limitations set forth in section 10 below, stated herein, Sika Corporation will repair roof leaks originating from the Sarnafil Roofing Membrane, Sarnatherm Insulation or Sika Corporation Roofing Accessories installed according to Sika Corporation's Technical instructions by a Sika Corporation Authorized Roofing Applicator for a period of 20 years commencing with the date of substantial completion of the installation of the Roofing Membrane with no monetary limit with respect to roof repair costs.

TERMS, CONDITIONS, LIMITATIONS

1. Owner shall notify Sika Corporation on the first business day immediately following the discovery of each leak in the Roofing System and confirm in writing within one week.
2. If on Sika Corporation's inspection, Sika Corporation determines that the leak is caused by a defect in Sarnafil Roofing Membrane, Sarnatherm Insulation or Accessory provided by Sika Corporation to the Applicator for this building or from a defect in the Sika Corporation Authorized Applicator's workmanship applied to that Sarnafil Membrane, except as provided in the following paragraph three (3) Owner's remedies and Sika Corporation's liability shall be limited to Sika Corporation's repair of the Roofing Membrane, Sarnatherm Insulation or Accessory.
3. This warranty does not apply and may be null and void if any of the following occur:
   (a) The Roofing Membrane, Sarnatherm Insulation or Accessory is damaged by a natural disaster including, but not limited to, earthquake, lightning, hail greater than 3/4 inches in diameter, peak wind gust in excess of 90 mph, hurricane, or tornado, as defined by The National Weather Service, or other acts of God, or:
   (b) The Roofing Membrane, Sarnatherm Insulation or Accessory is damaged by any act of negligence, accident, or misuse including, but not limited to, vandalism, falling objects, civil disobedience, or act of war, or:
   (c) A deficient pre-existing condition or equipment is causing water entry, or:
   (d) Metal work or other accessories or equipment is used in the Roofing and causes leaks, or:
   (e) There are any alterations or repairs made on or through the completed roof, or objects such as but not limited to fixtures, equipment, or structures are placed on or attached to the completed roof without first obtaining written authorization from Sika Corporation, or:
   (f) Failure by the Owner or his lessee to use reasonable care in maintaining the roof as described in the Owner's Guide provided with this warranty, including that of sealants and caulking, or:
   (g) Loss of integrity of the building envelope and, or structure including, but not limited to partial or complete loss of roof decking, wall siding, windows, doors or other envelope components or from roof damage by wind blown objects, or:
   (h) Condensation accumulates in the roof assembly due to incorrect design or due to a reduction in the vapor barrier effectiveness, or:
   (i) A significant change in the use of the building by the Owner or his lessee expected by Sika Corporation to effect the Roofing Membrane as originally installed, or:
   (j) The Roofing Membrane is damaged by contaminates and/or spills, or:
   (k) Deficient design applied to the Roofing Membrane such as membrane contact with incompatible materials and/or substrates, or:
   (l) The Owner fails to comply with every term and condition stated herein.
4. During the period of this warranty, Sika Corporation, its agents and employees, shall have free access to the roof during regular business hours.
5. Should the Roofing Membrane be concealed, the cost of exposure of the Roofing Membrane for purposes of Sika Corporation's investigation and/or repair, such as removal and replacement of any paving or overburden, shall be the Owner's responsibility.
6. Sika Corporation shall have no obligation under this warranty until all invoices for materials, installation, and services provided by Sika Corporation and the Sika Corporation Authorized Applicator have been paid for in full.
7. Sika Corporation's failure at any time to enforce any of the terms or conditions stated herein shall not be construed to be a waiver of such provision.
8. This warranty may be transferred to a subsequent Owner of the Building if approved in advance and in writing by Sika Corporation and the cost to process the transfer and to inspect and repair the Sika Corporation Roofing System, if necessary, such as but not limited to, removal and replacement of overburden, shall be the Owner's responsibility.
9. The Owner and Sika Corporation hereby agree that any and all claims (contractual, statutory, common law or otherwise), disputes, or suits that in any way, directly or indirectly, arise out of or relate to this Warranty, or the alleged breach thereof, or to any contracts between the owner and Sika Corporation, or the alleged breach thereof, or to the design, manufacture, sale, distribution, installation, and/or inspection of the Sika Corporation Roofing System, shall first be submitted to non-binding mediation before a neutral mediator jointly selected by the parties or, in the absence of agreement, as designated by the American Arbitration Association. In the absence of resolution by mediation, all such claims shall be settled by arbitration by the American Arbitration Association in accordance with the Construction Industry Arbitration Rules. Any such mediation and/or arbitration shall take place in Boston, Massachusetts. This Warranty, and any claims, disputes or suits between the parties hereto shall be governed by, and construed and enforced in accordance with, the laws of the Commonwealth of Massachusetts.
10. **THIS WARRANTY IS GIVEN IN LIEU OF ALL OTHER WARRANTIES, EXPRESS OR IMPLIED, INCLUDING ANY WARRANTY OF MERCHANTABILITY OR FITNESS FOR A PARTICULAR PURPOSE. THERE ARE NO WARRANTIES THAT EXTEND BEYOND THE DESCRIPTION ON THE FACE HEREOF. THE REMEDIES STATED HEREIN ARE EXCLUSIVE REMEDIES AND SIKA CORPORATION SHALL NOT BE RESPONSIBLE OR LIABLE FOR ANY INDIRECT, CONSEQUENTIAL OR INCIDENTAL DAMAGES INCLUDING THE PRESENCE OF MOLDS, FUNGI, BACTERIA, SPORES, MYCOTOXINS OR THE LIKE OR FURTHER LOSS OF ANY KIND WHATSOEVER, INCLUDING BUT NOT LIMITED TO, DAMAGE TO THE BUILDING ON WHICH THE COMPONENTS OF THE ROOF ARE SITUATED, DAMAGE TO THE CONTENTS THEREOF, LOSS OF USE OF THE BUILDING OR ANY COMPONENT PART THEREOF, OR DAMAGE TO ANY OTHER PROPERTY OR PERSONS.**

NO REPRESENTATIVE OF SIKA CORPORATION HAS AUTHORITY TO MAKE ANY REPRESENTATIONS OR PROMISES EXCEPT AS STATED HEREIN.

This Warranty Is Effective From: 12/05/2017 through: 12/05/2037

Michelle Cavacas — Date: 03/20/2018
Michelle Cavacas
Warranty Issuance Supervisor

Brian J. Whelan — Date: 03/20/2018
Brian J. Whelan
Executive Vice President

SIKA CORPORATION • ROOFING
100 Dan Road • Canton, MA 02021
Tel: 781-828-5400 • Fax: 781-828-5365 • usa.sarnafil.sika.com

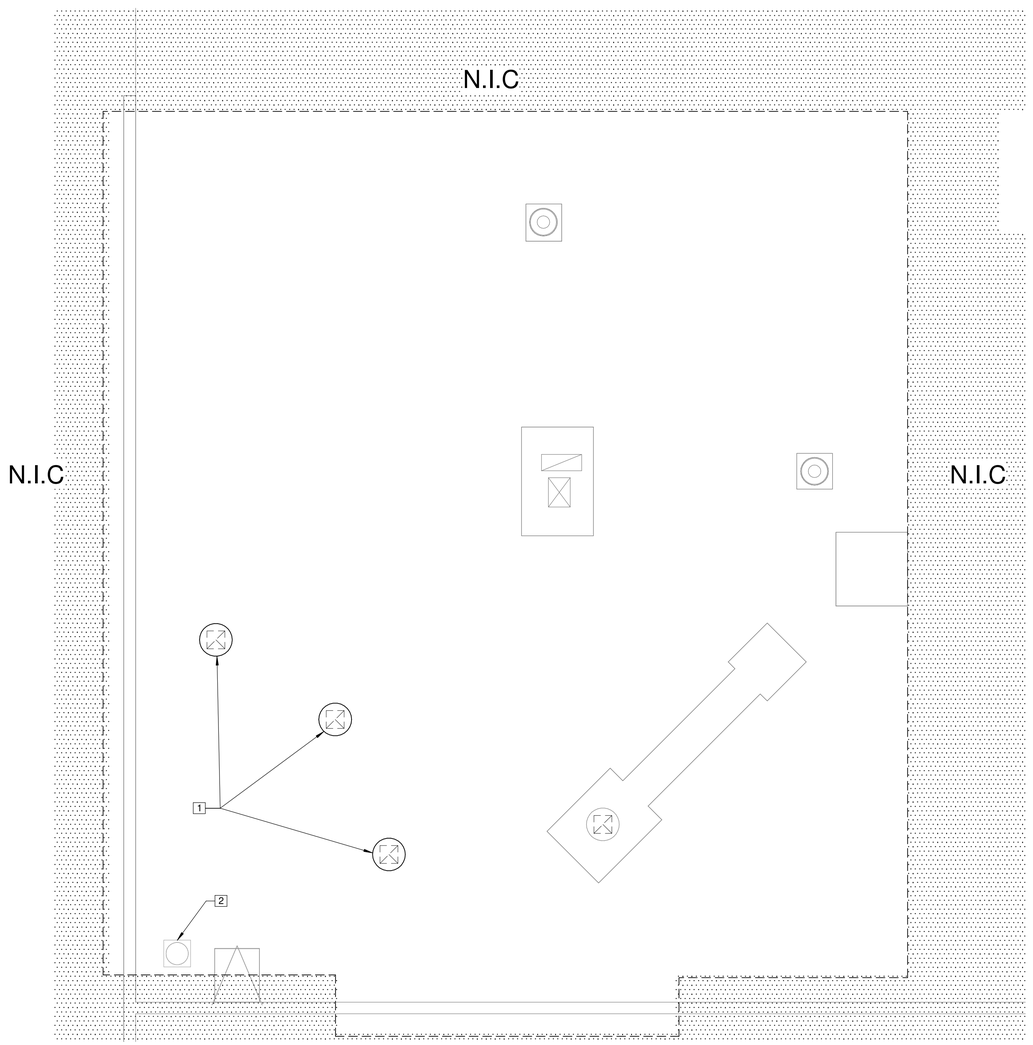

1 ROOF PLAN
1/4" = 1'-0"

GENERAL NOTES

KEY NOTES

1 DEMOLISH EXISTING KITCHEN EXHAUST AND PATCH ROOF TO MATCH EXISTING, INCLUDING BUT NOT LIMIT TO SUBSTRATE, INSULATION, COVER/HARD BOARD & MEMBRANE; GC IS REQUIRED TO CONTRACT WITH SIKA APPROVED APPLICATOR TO KEEP THE WARRANTY INTACT. THE APPLICATOR WILL NEED TO ARRANGE SIKA TECHNICAL STAFF TO PERFORM INSPECTION AFTER REPAIRS ARE COMPLETED.
2 EXISTING ROOF DRAIN TO REMAIN

FRANK LIN BROYLES REGISTERED ARCHITECT No. 7001 July 11, 2023 STATE OF NEVADA

IZ design studio
design . . sustainability . . architecture .
tel. 702.441.0026
fax. 702.475.4755
www.izdesignstudio.com
7229 W. Sahara Ave Suite 120
Las Vegas, NV 89117
Nevada

Sheet Name: ROOF PLAN
Project Name: SNHD BEHAVIORAL HEALTH 2
278 S. DECATUR BLVD
LAS VEGAS, NV 89107

DELTA NO.	REVISION NO.	DESCRIPTION	DATE

Project Number	21479
Date	08.02.2023
Drawn By	KC
Checked By	IB

A400

GENERAL STRUCTURAL NOTES

SPECIAL CONDITIONS, REQUIREMENTS AND NOTES TO OWNER, DEVELOPER AND CONTRACTORS

CONTRACTOR, BUILDER AND SUBCONTRACTORS INVOLVED IN ANY FORM OF CONSTRUCTION USING THESE DOCUMENTS SHALL INFORM THE OWNER AND DEVELOPER IN WRITING PRIOR TO CONSTRUCTION OF THE FOLLOWING RESPONSIBILITIES, PERFORMANCE CRITERIA AND LIMITATIONS AND RISKS ASSOCIATED WITH CONSTRUCTION. IF THE OWNER, DEVELOPER OR CONTRACTOR IS NOT ABLE TO ACCEPT RESPONSIBILITIES OR PERFORMANCE CRITERIA AND LIMITATIONS, NOTIFY OUR OFFICE PRIOR TO START OF CONSTRUCTION. IT SHALL BE EXPRESSLY UNDERSTOOD THAT THE ENGINEER IS NOT RESPONSIBLE OR LIABLE FOR THE LACK OF PERFORMANCE OF MATERIALS, SYSTEMS OR DESIGNS NOT BEING LIMITED TO ITEMS OUTLINED BELOW. CONTRACTORS AND SUBCONTRACTORS SHALL THOROUGHLY REVIEW ALL CONDITIONS AND RESPONSIBILITIES STATED IN THESE NOTES, GENERAL STRUCTURAL NOTES, PLANS, SECTIONS AND DETAILS AND SHALL NOTIFY THE ENGINEER AND OWNER IN WRITING PRIOR TO CONSTRUCTION OF ANY CONDITIONS OR RESPONSIBILITIES WHICH ARE NOT ACCEPTABLE OR NOT UNDERSTOOD.

1. VARIATION IN DIMENSIONS MAY OCCUR AS A RESULT OF THERMAL INFLUENCES, NATURAL DEFLECTIONS AND/OR CAMBERS OF MEMBERS. AS A RESULT, QUANTITIES MAY VARY AND ARCHITECTURAL FINISHES MAY BE AT RISK OF COSMETIC VARIATION OR DAMAGE.

2. THE ENGINEER SHALL NOT BE RESPONSIBLE FOR VARIATIONS TO PLANS BETWEEN BID PROCESS AND FINALIZED APPROVED DOCUMENTS RELEASED FOR CONSTRUCTION. ADDITIONS AND ALTERATIONS MAY BE MADE BETWEEN RELEASE OF BID DOCUMENTS AND FINALIZED CONSTRUCTION DOCUMENTS.

3. DESIGNS HAVE BEEN COMPLETED USING THE CODE STATED IN THE BASIS FOR DESIGN. WHERE MORE THAN ONE REFERENCE IS LISTED BELOW, THE REFERENCE THAT CORRESPONDS TO THE CODE STATED IN THE BASIS OF DESIGN SHALL BE USED. OTHER SPECIALIZED CODES OR DIRECTIVES (HUD, OSHA, ASSHTO, ETC.) ARE NOT USED IN THE PREPARATION OF THESE DOCUMENTS AND ARE NOT REFERENCED.

4. THESE DRAWINGS HAVE BEEN PREPARED USING STANDARDS OF PROFESSIONAL CARE AND COMPLETENESS NORMALLY EXERCISED UNDER SIMILAR CIRCUMSTANCES BY REPUTABLE STRUCTURAL ENGINEERS IN THIS OR SIMILAR LOCALITIES. THEY NECESSARILY ASSUME THAT THE WORK DEPICTED WILL BE PERFORMED BY AN EXPERIENCED CONTRACTOR, SUBCONTRACTOR AND/OR WORK PERSONS WHO HAVE A WORKING KNOWLEDGE OF THE APPLICABLE CODE STANDARDS AND REQUIREMENTS AND OF INDUSTRY ACCEPTED STANDARD GOOD PRACTICE. AS NOT EVERY CONDITION OR ELEMENT IS (OR CAN BE) EXPLICITLY SHOWN ON THESE DRAWINGS, IT IS UNDERSTOOD THAT THE CONTRACTOR WILL USE INDUSTRY ACCEPTED STANDARD GOOD PRACTICE FOR ALL WORK NOT EXPLICITLY SHOWN.

5. CALCULATION AND DESIGN OF MISCELLANEOUS NON-STRUCTURAL ITEMS, SUCH AS STAIRS, RAILINGS, NON-STRUCTURAL WALLS AND PREFABRICATED STRUCTURAL ITEMS, SUCH AS FLOOR AND ROOF TRUSSES, ARE NOT INCLUDED AND IS TO BE PROVIDED BY OTHERS UNLESS SPECIFICALLY NOTED ON THESE DRAWINGS.

6. THESE DRAWINGS REPRESENT THE FINISHED STRUCTURE. THEY DO NOT INDICATE THE METHOD OF CONSTRUCTION. THE CONTRACTOR SHALL BE SOLELY RESPONSIBLE FOR CONSTRUCTION MEANS, METHODS, TECHNIQUES, SEQUENCES AND PROCEDURES. IT SHALL BE THE CONTRACTOR'S RESPONSIBILITY TO DESIGN AND PROVIDE ADEQUATE SHORING, BRACING, FORMWORK, ETC. AS REQUIRED FOR THE PROTECTION OF LIFE AND PROPERTY DURING CONSTRUCTION. CONSTRUCTION MATERIALS SHALL BE UNIFORMLY SPREAD OUT SUCH THAT DESIGN LIVE LOAD PER SQUARE FOOT AS STATED HEREIN IS NOT EXCEEDED. VISITS TO THE SITE BY THE STRUCTURAL ENGINEER SHALL NOT INCLUDE INSPECTION OF THE ABOVE ITEMS.

7. THE CONTRACTOR SHALL BE RESPONSIBLE FOR ALL EXCAVATION PROCEDURES INCLUDING SHORING AND PROTECTION OF ADJACENT PROPERTY, STRUCTURES, STREETS AND UTILITIES IN ACCORDANCE WITH THE LOCAL BUILDING DEPARTMENT. ALL WORK OR CONSTRUCTION SHALL COMPLY WITH ALL APPLICABLE BUILDING CODES, REGULATIONS AND SAFETY REQUIREMENTS.

8. THE CONTRACTOR SHALL BE RESPONSIBLE FOR VERIFICATION OF ALL DIMENSIONS, CONDITIONS AND ELEVATIONS WITH ARCHITECTURAL DRAWINGS PRIOR TO START OF CONSTRUCTION. THE CONTRACTOR SHALL INFORM THE ARCHITECT IN WRITING OF ANY DISCREPANCIES OR OMISSIONS NOTED ON THE DRAWINGS. ANY SUCH DISCREPANCY, OMISSION, OR VARIATION NOT REPORTED BEFORE START OF CONSTRUCTION SHALL BE THE RESPONSIBILITY OF THE CONTRACTOR.

9. WHERE REFERENCE IS MADE TO VARIOUS TEST STANDARDS FOR MATERIALS, SUCH STANDARDS SHALL BE THE LATEST EDITION AND/OR ADDENDA.

10. OPTIONS ARE FOR CONTRACTOR'S CONVENIENCE. IF AN OPTION IS USED, THE CONTRACTOR SHALL BE RESPONSIBLE FOR ALL NECESSARY CHANGES AND SHALL COORDINATE ALL DETAILS.

11. TYPICAL DETAILS AND NOTES SHALL APPLY, THOUGH NOT NECESSARILY INDICATED AT A SPECIFIC LOCATION ON PLANS. WHERE NO DETAILS ARE SHOWN, CONSTRUCTION SHALL CONFORM TO SIMILAR WORK ON THE PROJECT. DETAILS MAY SHOW ONLY ONE SIDE OF CONNECTION OR MAY OMIT INFORMATION FOR CLARITY. WHERE DISCREPANCIES OCCUR IN THESE DRAWINGS, NOTES AND DETAILS ON DRAWINGS SHALL TAKE PRECEDENCE OVER GENERAL STRUCTURAL NOTES AND TYPICAL DETAILS.

12. ALL OPENINGS ARE NOT SHOWN ON THESE DRAWINGS. ESTABLISH AND VERIFY ALL OPENINGS AND INSERTS FOR ARCHITECTURAL, MECHANICAL, PLUMBING AND ELECTRICAL WITH APPROPRIATE TRADES, DRAWINGS AND SUBCONTRACTORS PRIOR TO CONSTRUCTION. OPENINGS MAY REQUIRE ADDITIONAL REINFORCING OR SUPPORTS AS SHOWN ON TYPICAL DETAILS. IF TYPICAL DETAILS FOR ALL CONDITIONS ARE NOT INCLUDED HEREIN, IT SHALL BE THE RESPONSIBILITY OF THE CONTRACTOR TO REQUEST IN WRITING ADDITIONAL INFORMATION.

13. ALL INSPECTIONS REQUIRED BY THE BUILDING CODES, LOCAL BUILDING OFFICIALS, OR BY THESE PLANS SHALL BE PROVIDED BY AN INDEPENDENT INSPECTION COMPANY OR, THE BUILDING DEPARTMENT. INSPECTION REQUIREMENTS STATED HEREIN ARE PARTIAL. COMPLETE INSPECTION REQUIREMENTS SHALL BE AS DIRECTED BY THE LOCAL BUILDING DEPARTMENT. SITE VISITS BY THE ENGINEER DO NOT CONSTITUTE AN INSPECTION, UNLESS SPECIFICALLY CONTRACTED FOR.

14. SHOP DRAWINGS SHALL BE SUBMITTED FOR ALL STRUCTURAL ITEMS. SHOP DRAWINGS ARE REVIEWED ONLY FOR GENERAL COMPLIANCE WITH THE STRUCTURAL DRAWINGS. REVIEW DOES NOT INDICATE THAT THE SHOP DRAWINGS ARE CORRECT OR COMPLETE. RESPONSIBILITY FOR CORRECTNESS SHALL REST WITH THE CONTRACTOR. ANY CHANGES, SUBSTITUTIONS, OR DEVIATIONS FROM CONTRACT DRAWINGS SHALL BE CLOUDED. ANY OF THE AFOREMENTIONED SHALL NOT BE CONSIDERED APPROVED AFTER ENGINEER'S REVIEW UNLESS SPECIFICALLY NOTED ACCORDINGLY. THE SHOP DRAWINGS DO NOT SUPERSEDE OR REPLACE THE ORIGINAL CONTRACT DRAWINGS. ANY ENGINEERING PROVIDED BY OTHERS AND SUBMITTED FOR REVIEW SHALL BEAR THE SEAL OF AN APPROPRIATELY REGISTERED ENGINEER. THE ENGINEER SHALL NOT BE RESPONSIBLE FOR THE ADEQUACY OF ENGINEERING DESIGNS PERFORMED BY OTHERS. ALLOW FIVE WORKING DAYS FOR THE ENGINEER'S REVIEW. ONE COPY OF EACH SUBMITTAL WILL BE RETAINED FOR THE ENGINEER'S RECORDS.

BASIS FOR DESIGN

1. BUILDING CODE: 2018 INTERNATIONAL BUILDING CODE (IBC)

2. RISK CATEGORY: II

3. FLOOR LOADS: DESKS: MAXIMUM OF SIMULTANEOUS VERTICAL AND HORIZONTAL THRUST OF 50 PLF APPLIED AT THE TOP OF THE DESK OR 200 LBS IN ANY DIRRECTION

4. SNOW LOAD: N/A

5. FLOOD LOAD: N/A

6. SPECIAL LOADS: N/A

STRUCTURAL STEEL

1. STRUCTURAL STEEL MEMBERS SHALL CONFORM WITH THE FOLLOWING STANDARDS AND MATERIAL PROPERTIES UNLESS NOTED OTHERWISE:

SHAPE	STANDARD	Fy
ROLLED WIDE FLANGE SECTIONS:	ASTM A992	50 KSI
OTHER STANDARD STEEL SHAPES AND ROLLED SECTIONS:	ASTM A36	36 KSI
BARS AND PLATES:	ASTM A36	36 KSI
PIPES:	ASTM A53 TYPE E OR S, GRADE B	35 KSI
TUBES:	ASTM A500 GRADE B	46 KSI
BOLTS AT STEEL CONNECTIONS:	ASTM A325 OR A490	---
FOUNDATION ANCHOR BOLTS	ASTM FI554	36 KSI
HEADED STEEL STUDS	ASTM A108	

2. ALL BOLTS SHALL BE INSTALLED AS BEARING-TYPE CONNECTIONS WITH THREADS EXCLUDED FROM SHEAR PLANE (TYPE "X" CONNECTION), UNLESS NOTED OTHERWISE. HIGH-STRENGTH BOLTS SHALL BE TIGHTENED USING ANY AISC APPROVED METHOD. BOLTS IN SHEAR/BEARING CONNECTIONS ARE TO BE TIGHTENED ACCORDING TO THE FOLLOWING:

BOLT TYPE	TIGHTENING
A307	SNUG TIGHT
A325N/A490N	SNUG TIGHT
A325X/A490X	SNUG TIGHT
A325SC/A490SC	FULL PRETENSIONING

3. ALL THREADED ROD AND THREADED STUDS SHALL BE ASTM A307 UNLESS NOTED OTHERWISE. ALL EXPANSION OR EPOXY BOLTS SHALL HAVE CURRENT ICC RATING FOR MATERIAL INTO WHICH INSTALLATION OCCURS. HEADED STUDS SHALL CONFORM TO ALL REQUIREMENTS OF THE LATEST EDITION OF THE "RECOMMENDED PRACTICES FOR STUD WELDING" AND THE "STRUCTURAL WELDING CODE" PUBLISHED BY AMERICAN WELDING SOCIETY (AWS). HEADED STUDS SHALL BE AUTOMATICALLY WELDED.

4. ALL STRUCTURAL AND MISCELLANEOUS STEEL SHALL BE FABRICATED AND ERECTED IN ACCORDANCE WITH AISC SPECIFICATIONS FOR THE DESIGN, FABRICATION AND ERECTION OF STRUCTURAL STEEL FOR BUILDINGS, LATEST EDITION.

5. WELDING SHALL BE PERFORMED BY WELDERS HOLDING VALID CERTIFICATES AND HAVING CURRENT EXPERIENCE IN THE TYPE OF WELD SHOWN ON THE DRAWINGS. ALL WELDING SHALL USE E70 SERIES LOW HYDROGEN ELECTRODES UNLESS NOTED OTHERWISE. ALL WELDS INVOLVING REINFORCING BARS SHALL USE E70 OR E90 SERIES ELECTRODES. ALL WELDING SHALL CONFORM TO THE LATEST AMERICAN WELDING SOCIETY (AWS) STANDARDS. WELDS ON DRAWINGS ARE SHOWN AS SHOP WELDS. CONTRACTOR MAY SHOP WELD OR FIELD WELD AT HIS DISCRETION. ALL FULL PENETRATION WELDS SHALL BE TESTED AND CERTIFIED BY AN INDEPENDENT TESTING LABORATORY.

COLD FORMED STEEL FRAMING

1. ALL COLD-FORMED STEEL FRAMING SHALL BE FABRICATED AND ERECTED IN ACCORDANCE WITH MANUFACTURER'S RECOMMENDATIONS AND IN ACCORDANCE WITH THE LATEST EDITION OF "SPECIFICATIONS FOR THE DESIGN OF COLD-FORMED STEEL STRUCTURAL MEMBERS" BY THE AMERICAN IRON AND STEEL INSTITUTE.

2. STRUCTURAL DRAWINGS TYPICALLY SHOW ONLY THE PRIMARY STRUCTURAL FRAMING ELEMENTS OF THE SYSTEM. CONTRACTOR SHALL PROVIDE ALL ACCESSORIES INCLUDING TRACKS, WEB STIFFENERS, BLOCKING, LINTELS, CLIP ANGLES, REINFORCEMENTS, FASTENING DEVICES, BRACING, AND OTHER ACCESSORIES AS RECOMMENDED BY THE MANUFACTURER TO PROVIDE A COMPLETE FRAMING SYSTEM.

3. STEEL FOR 12, 14 AND 16 GAGE STUDS AND JOISTS SHALL HAVE MINIMUM YIELD STRENGTH OF 50 KSI. STEEL FOR ALL 18, 20 AND 25 GAGE STUDS AND JOISTS, ALL GAGES OF TRACK, ALL DIAGONAL TENSION STRAPS OR BRACES, AND BRIDGING SHALL HAVE MINIMUM YIELD STRENGTH OF 33 KSI. STEEL SHALL BE GALVANIZED OR THOROUGHLY COATED WITH RUST INHIBITIVE PAINT AT ALL LOCATIONS.

4. FASTENING OF COMPONENTS SHALL BE WITH SELF-TAPPING SCREWS OR WELDS. ALL WELDS OF GALVANIZED STEEL SHALL BE TOUCHED UP WITH ZINC-RICH PAINT. ALL WELDS OF CARBON SHEET STEEL SHALL BE TOUCHED UP WITH PAINT.

5. ALL STUDS SHALL BE SECURELY SEATED FOR FULL END BEARING ON TOP AND BOTTOM TRACK. UNLESS NOTED OTHERWISE, PROVIDE DOUBLE STUDS AT ALL JAMBS, CORNERS, INTERSECTIONS, AND BEAM BEARING.

6. WALL STUD BRIDGING, AS RECOMMENDED BY THE STUD MANUFACTURER, SHALL BE INSTALLED TO PREVENT BOTH WEAK AXIS BENDING AND STUD ROTATION AT 4'-0" MAXIMUM INTERVALS. WALLS 8'-0" AND SHORTER SHALL HAVE A SINGLE ROW OF BRIDGING AT MID-HEIGHT. EXCEPT AS NOTED WALL BRIDGING IS NOT REQUIRED AT WALL WITH GYPSUM WALLBOARD FINISH ON BOTH SIDES. IN ADDITION, BRIDGING SHALL BE PROVIDED AT ROOF LINES AND ELSEWHERE AS NOTED ON THE DRAWINGS. SOLID BLOCKING SHALL BE INSTALLED IN LIEU OF BRIDGING WHERE NOTED ON THE DRAWINGS.

7. SCREWS SHALL BE SELF-TAPPING PAN HEAD, HEX HEAD, OR WAFER HEAD SHEET METAL SCREWS. A SCREW OF A LARGER DIAMETER SHALL REPLACE SCREWS, WHICH ARE REMOVED, WHERE THE REPLACEMENT IS MADE INTO AN EXISTING HOLE. REPLACE ALL SCREWS, WHICH STRIP OUT MATERIAL. SCREWS SHALL BE SPACED NO CLOSER THAN 5/8 INCH ON CENTER AND WITH A MINIMUM FREE EDGE DISTANCE OF 1/2 INCH. CLIP ANGLES OR FLAT CLIPS USED FOR ATTACHMENTS SHALL BE SINGLE GAGE LARGER THAN CONNECTED PIECES, 18 GAGE MINIMUM, UNLESS NOTED OTHERWISE. SIZE CLIP ANGLES AND FLAT CLIPS TO MAINTAIN MINIMUM SCREW SPACING AND EDGE DISTANCES NOTED ABOVE. ALL SCREWS #8 AND LARGER SHALL HAVE A MINIMUM HEAD SIZE OF 5/16 INCH.

8. ALL WELDING SHALL BE PERFORMED BY WELDERS EXPERIENCED IN LIGHT GAGE, STRUCTURAL STEEL FRAMING WORK.

9. STUDS SIZE WHERE NOT SPECIFICALLY NOTED ON DETAILS SHALL BE 3-5/8 INCH WIDE BY 1-3/8 INCH DEEP BY 20 GAGE (362S137-33) MINIMUM. TRACK SIZE WHERE NOT SPECIFICALLY NOTED ON DETAILS SHALL BE 3-5/8 INCH WIDE BY 1-1/4 INCH DEEP BY 20 GAGE (362T125-33) MINIMUM.

10. JOISTS, STUDS, TRACK, ETC., SHALL HAVE STEEL THICKNESS AND EFFECTIVE SECTION PROPERTIES AS LISTED IN THE LATEST EDITION OF THE STEEL STUD MANUFACTURERS ASSOCIATION MANUAL, OR EQUIVALENT.

11. POWER ACTUATED FASTENERS (PAF) SHALL BE HILTI X-U FASTENERS (ICC REPORT NO. ESR-2269) OR ICC APPROVED MANUFACTURER WITH EQUIVALENT OR GREATER SHEAR AND TENSION VALUES. FASTENERS SHALL BE INSTALLED PER ALL MANUFACTURER REQUIREMENTS. LIGHT GAGE STEEL MEMBERS ANCHORAGE TO CONCRETE, MASONRY OR STRUCTURAL STEEL BY MEANS OF POWER ACTUATED FASTENERS SHALL HAVE CONNECTOR SPACING NOT TO EXCEED 24" OC, UNLESS NOTED OTHERWISE ON PLANS. MINIMUM POWER ACTUATED FASTENERS POINT PENETRATION; STEEL: 3/8", CONCRETE: 1", MASONRY: 1". MINIMUM EDGE DISTANCES; STEEL: 1/2", CONCRETE: 3", MASONRY: 4". MINIMUM SPACING BETWEEN FASTENERS; STEEL: 1", CONCRETE: 4", MASONRY: SEE REPORT.

INSPECTION NOTES

1. IN ADDITION TO THE STANDARD INSPECTIONS BY THE BUILDING OFFICIAL REQUIRED PER IBC CHAPTER 17, THE OWNER SHALL EMPLOY ONE OR MORE SPECIAL INSPECTORS WHO SHALL PROVIDE INSPECTIONS DURING CONSTRUCTION FOR THE TYPES OF WORK LISTED IN THIS SECTION.

2. THE SPECIAL INSPECTOR SHALL BE A QUALIFIED PERSON WHO SHALL DEMONSTRATE COMPETENCE, TO THE SATISFACTION OF THE BUILDING OFFICIAL, FOR INSPECTION OF THE PARTICULAR TYPE OF CONSTRUCTION OR OPERATION REQUIRING SPECIAL INSPECTION.

3. THE SPECIAL INSPECTOR SHALL INSPECT THE WORK ASSIGNED FOR CONFORMANCE WITH THE APPROVED CONTRACT DRAWINGS AND SPECIFICATIONS. SPECIAL INSPECTOR SHALL FURNISH INSPECTION REPORTS TO THE BUILDING OFFICIAL, THE ENGINEER OF RECORD, AND OTHER DESIGNATED PERSONS. ALL DISCREPANCIES SHALL BE BROUGHT TO THE IMMEDIATE ATTENTION OF THE CONTRACTOR FOR CORRECTION, THEN, IF UNCORRECTED, TO THE ENGINEER AND THE BUILDING OFFICIAL. THE SPECIAL INSPECTOR SHALL SUBMIT A FINAL SIGNED REPORT STATING WHETHER THE WORK REQUIRING SPECIAL INSPECTION WAS, TO THE BEST OF THE INSPECTOR'S KNOWLEDGE, IN CONFORMANCE WITH THE APPROVED PLANS AND SPECIFICATIONS AND THE APPLICABLE CODE PROVISIONS.

4. INSPECTORS SHALL INSPECT FROM AN APPROVED SET OF CONTRACT DRAWINGS. SHOP DRAWINGS SHALL NOT BE USED IN LIEU OF THE APPROVED CONTRACT DRAWINGS FOR INSPECTION PURPOSES.

5. TYPES OF WORK TO BE INSPECTED BY THE SPECIAL INSPECTOR ARE AS FOLLOWS:

a) DURING INSTALLATION FOR ALL POST-INSTALLED ANCHORS INTO CONCRETE OR MASONRY INCLUDING SCREW ANCHORS, EXPANSION/WEDGE ANCHORS, SLEEVE ANCHORS, OR EPOXY ANCHORS OR REBAR INCLUDING VERIFICATION OF ANCHOR/EPOXY MANUFACTURER, ANCHOR TYPE, DIAMETER AND EMBEDMENT, ANCHOR ROD/REINFORCING GRADE, HOLE DEPTH AND DIAMETER AND ALL CLEANOUT AND INSTALLATION PROCEDURES IN ACCORDANCE WITH THE CONTACT DRAWINGS AND THE MANUFACTURER'S SPECIFICATIONS AND RECOMMENDATIONS.

6. CERTIFICATE OF APPROVAL REGARDING MATERIALS AND INSPECTION OF PREFABRICATED ITEMS SHALL BE PROVIDED IN ACCORDANCE WITH IBC SECTION 1703 THE QUALITY ASSURANCE PROGRAM.

STANDARD ABBREVIATIONS

AB	ANCHOR BOLT
ACI	AMERICAN CONCRETE INSTITUTE
ACS	ALL COMMON SURFACES
AISC	AMERICAN INSTITUTE OF STEEL CONSTRUCTION
AISI	AMERICAN IRON AND STEEL INSTITUTE
ANSI	AMERICAN NATIONAL STANDARDS INSTITUTE
ARCHTL	ARCHITECTURAL
ALT	ALTERNATE
ASTM	AMERICAN SOCIETY FOR TESTING AND MATERIAL
BFF	BELOW FINISH FLOOR
BO	BOTTOM OF
BOD	BOTTOM OF DECK
B	BOTTOM
BOT	BOTTOM
BM	BOTTOM MOST
BRG	BEARING
C	CHANNEL
CJ	CONTROL JOINT
CJP	COMPLETE JOINT PENETRATION
℄	CENTER LINE
CLR	CLEAR
COL	COLUMN
CONC	CONCRETE
CONT	CONTINUOUS
DIA or ∅	DIAMETER
DIAG	DIAGONAL
DWG	DRAWING
EF	EACH FACE
EL	ELEVATION
EQ	EQUAL
EW	EACH WAY
FF	FINISH FLOOR
FLR	FLOOR
FND	FOUNDATION
FT	FOOT
FTG	FOOTING
GA	GAGE
GSN	GENERAL STRUCTURAL NOTES
HI	HIGH
HORIZ	HORIZONTAL
IBC	INTERNATIONAL BUILDING CODE
ICC	INTERNATIONAL CODE CONFERENCE
ID	INSIDE DIAMETER
INFO	INFORMATION
JT	JOINT
K	KIP (1,000 LBS.)
KSI	KIPS PER SQUARE INCH
L	ANGLE
LLH	LONG LEG HORIZONTAL
LLV	LONG LEG VERTICAL
LO	LOW
MFR	MANUFACTURER
MAX	MAXIMUM
MECH	MECHANICAL
MIN	MINIMUM
MISC	MISCELLANEOUS
NTS	NOT TO SCALE
OC	ON CENTER
OD	OUTSIDE DIAMETER
OPP	OPPOSITE
PL	PLATE
PLF	POUNDS PER LINEAR FOOT
PSF	POUNDS PER SQUARE FOOT
PSI	POUNDS PER SQUARE INCH
PAF	POWDER ACTUATED FASTENERS
REQ'D	REQUIRED
SIM	SIMILAR
SPEC	SPECIFICATION
STD	STANDARD
T	TOP
TM	TOP MOST
T&B	TOP AND BOTTOM
T&G	TONGUE AND GROOVE
TO	TOP OF
TOC	TOP OF CONCRETE
TOD	TOP OF DECK
TOF	TOP OF FOOTING
TOL	TOP OF LEDGER
TOP	TOP OF PANEL
TOS	TOP OF STEEL
TOW	TOP OF WALL
TYP	TYPICAL
UBC	UNIFORM BUILDING CODE
UNO	UNLESS OTHERWISE NOTED
VERT	VERTICAL
W	WIDE FLANGE
W/	WITH
W/O	WITHOUT
WT	WEIGHT
WWF	WELDED WIRE FABRIC

PROFESSIONAL ENGINEER - STATE OF NEVADA
GREGG N. MENDENHALL
EXP. 12/31/2023
CIVIL/STRUCTURAL
No. 008493

09/22/2023

SHEET INDEX

ISSUED 09/21/2023	ISSUED 09/06/2023	ISSUED 08/18/2023	SHEET NO.	SHEET TITLE
●	●	●	S000	GENERAL STRUCTURAL NOTES
△3	●	●	S100	FLOOR PLAN
△3	△2	●	S200	DETAILS

IMEG
370 E. WINDMILL LANE
SUITE 100, LAS VEGAS, NV
89123
PH: 702.3677-6725
www.imegcorp.com
IMEG #23002690.00

IZ design studio
design...sustainability...architecture.
tel. 702.441.0026
fax. 702.475.4755
www.izdesignstudio.com
7229 W. Sahara Ave Suite 110
Las Vegas, NV 89117
Nevada

GENERAL STRUCTURAL NOTES
SNHD
SNHD BEHAVIORAL HEALTH 2
278 S. DECATUR BLVD
LAS VEGAS, NV 89107

Sheet Name
Project Name

DELTA NO.	REVISION NO.	DESCRIPTION	DATE
2	2	PLAN CHECK COMMENTS	
3	3	PLAN CHECK COMMENTS	

Project Number	21479
Date	08/18/2023
Drawn By	IMEG
Checked By	PE

S000

STRUCTURAL FRAMING PLAN NOTES:

1. VERIFY DIMENSIONS AND CONDITIONS WITH ARCHITECTURAL DRAWINGS PRIOR TO CONSTRUCTION.

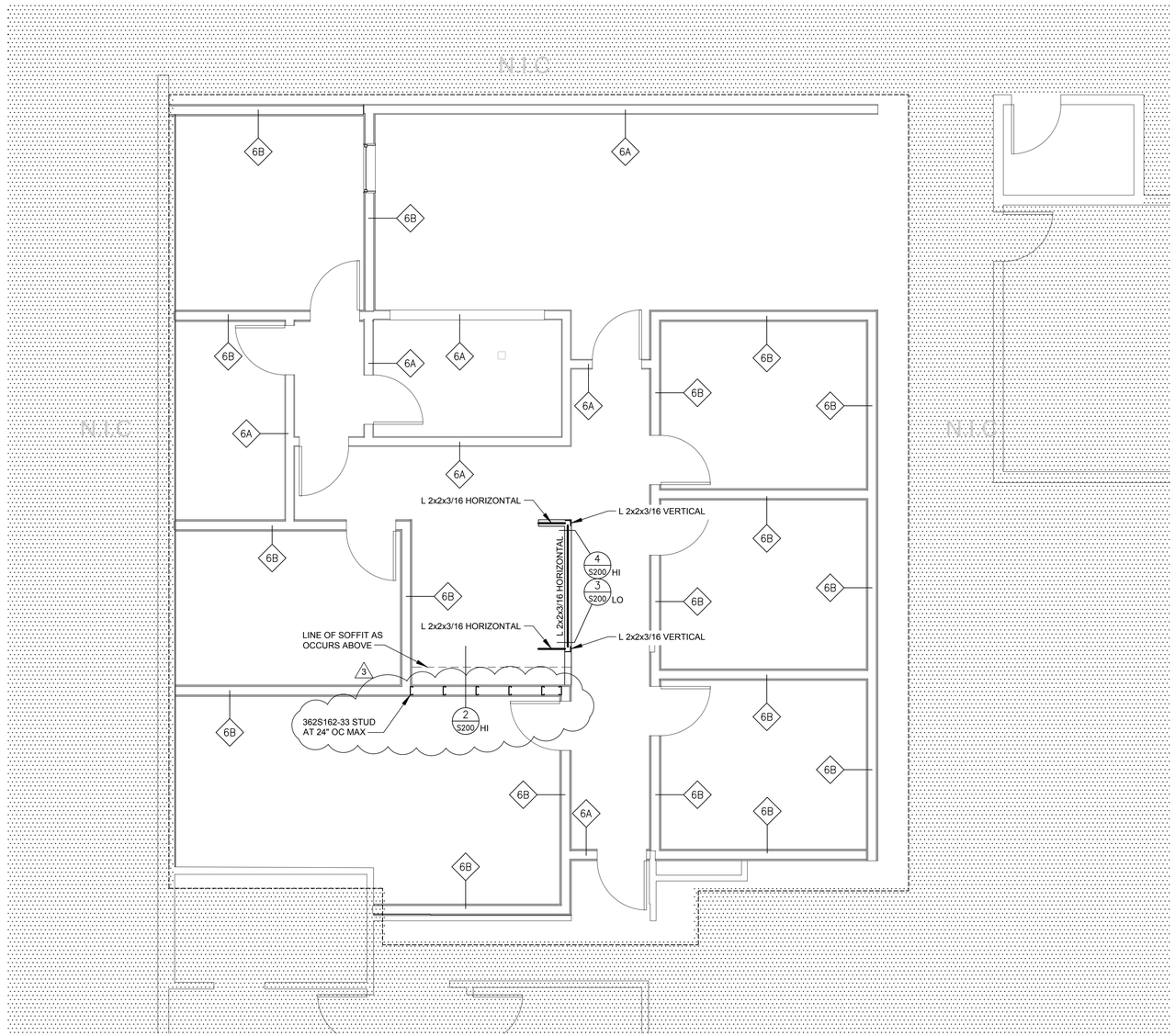

FLOOR PLAN

SCALE: 1/4" = 1'-0"

PROFESSIONAL ENGINEER, STATE OF NEVADA
GREGG N. MENDENHALL
EXP. 12/31/2023
CIVIL/ STRUCTURAL
No. 008493

09/22/2023

IMEG
370 E. WINDMILL LANE
SUITE 100, LAS VEGAS, NV
89123
PH: 702.3677-6725
www.imegcorp.com
IMEG #23002690.00

IZ design studio
design...sustainability...architecture.

tel 702.441.0006
fax 702.475.4755
www.izdesignstudio.com
7229 W. Sahara Ave Suite 170
Las Vegas, NV 89117
Nevada

Sheet Name
FLOOR PLAN
SNHD

Project Name
SNHD BEHAVIORAL HEALTH 2
278 S. DECATUR BLVD
LAS VEGAS, NV 89107

DELTA NO.	REVISION NO.	DESCRIPTION	DATE
2	2	PLAN CHECK COMMENTS	
3	3	PLAN CHECK COMMENTS	

Project Number	21479
Date	08/18/2023
Drawn By	IMEG
Checked By	PE

S100

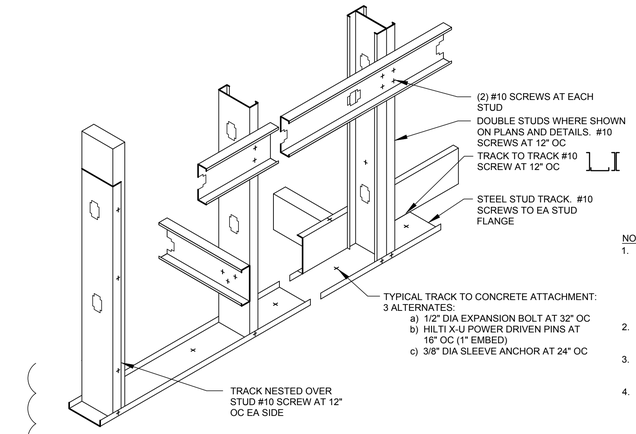

NOTE:

1. ALL STEEL STUD INTERSECTIONS SHALL BE SCREWED WITH (2) #10 SCREWS. FOR SIZE AND GAGE OF TYP STEEL STUDS, SEE GSN. SPECIAL SIZES ARE CALLED OUT IN DETAILS.
2. STUDS SHALL BE 600S125-30 AT 24" OC TYPICAL, UNO.
3. LATERAL BRIDGING AT STUD WALLS PER GSN
4. WELDED CONNECTIONS MAY BE USED AS ALTERNATE AT 16 GA MIN MATERIAL. 3/4" x 1/8" FILLET WELD FOR EACH SCREW

3 1 TYPICAL STEEL STUD ATTACHMENT

LSS01-10 NO SCALE

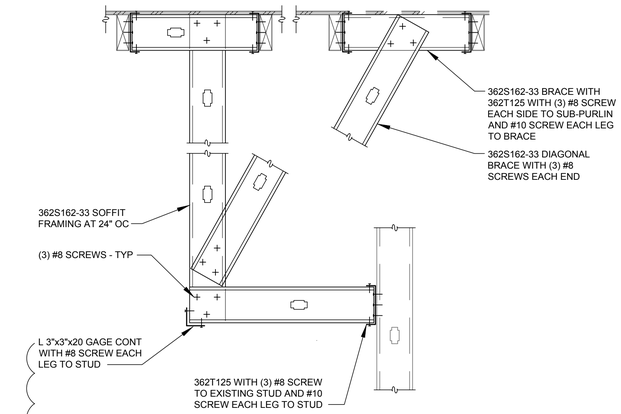

3 2 SOFFIT AT EXISTING COLD FORMED STUD WALL

S200-02 23002690.00 NO SCALE

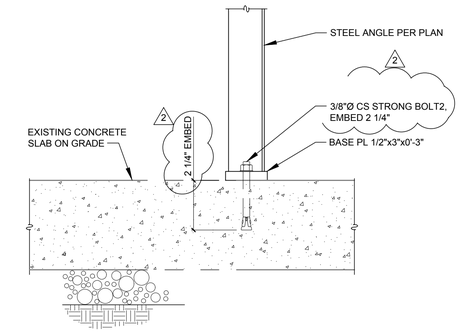

3 STEEL ANGLE AT BASE PLATE

S200/03 23002690.00 NO SCALE

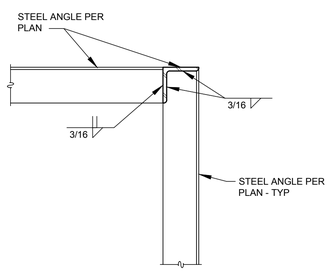

4 ANGLE TO ANGLE WELD CONNECTION

S200-04 23002690.00 NO SCALE

6A 600S125-30- 33 ksi - 23'-1" MAX HEIGHT

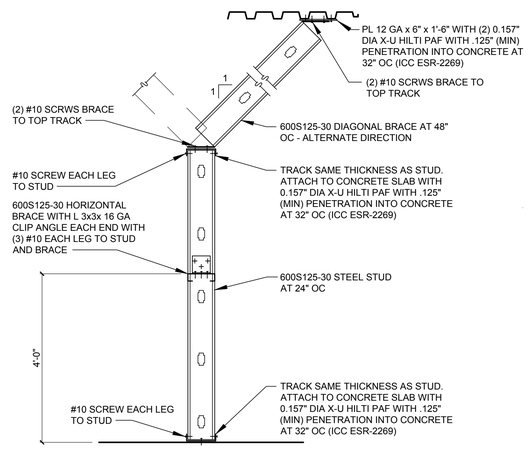

6B 600S125-30- 33 ksi - 23'-1" MAX HEIGHT

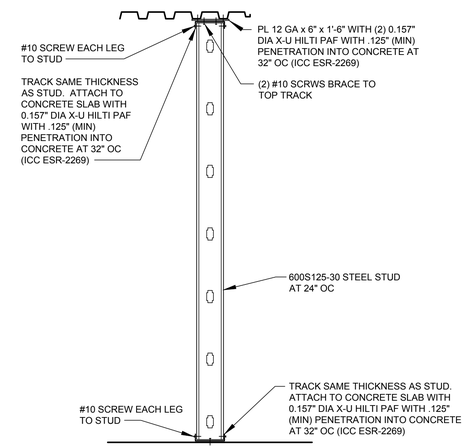

3 5 NON-BEARING INTERIOR WALL DETAILS

S200-05 23002690.00 NO SCALE

09/22/2023

IMEG
370 E. WINDMILL LANE
SUITE 100, LAS VEGAS, NV 89123
PH: 702.3677-6725
www.imegcorp.com
IMEG #23002690.00

IZ design studio
design...sustainability...architecture.
tel. 702.441.0026
fax. 702.475.4755
www.izdesignstudio.com
7229 W. Sahara Ave Suite 170
Las Vegas, NV 89117
Nevada

DETAILS
SNHD
SNHD BEHAVIORAL HEALTH 2
278 S. DECATUR BLVD
LAS VEGAS, NV 89107

DELTA NO.	REVISION NO.	DESCRIPTION	DATE
2	2	PLAN CHECK COMMENTS	
3	3	PLAN CHECK COMMENTS	

Sheet Name

Project Name

Project Number	21479
Date	08/18/2023
Drawn By	IMEG
Checked By	PE

S200

MECHANICAL SYMBOL LIST

NOTE: THIS IS A MASTER SCHEDULE. NOT ALL SYMBOLS CONTAINED HEREIN MAY APPEAR ON THE DRAWINGS.

	ITEM TO BE REMOVED
	POINT OF CONNECTION/DISCONNECTION
#	SHEET NOTE
#	REVISION NUMBER
TAG / UNIT	EQUIPMENT MARK
TAG / CFM	DIFFUSER TAG
	ACCESS PANEL
	SUPPLY AIR DUCT UP/DOWN
	RETURN AIR DUCT UP/DOWN
	EXHAUST AIR DUCT UP/DOWN
	RETURN GRILLE
	EXHAUST GRILLE
	4-WAY BLOW SUPPLY DIFFUSER
	3-WAY BLOW SUPPLY DIFFUSER
	2-WAY BLOW SUPPLY DIFFUSER
	1-WAY BLOW SUPPLY DIFFUSER
	AIRFLOW DIRECTION
--"Ø	ROUND DUCTWORK (INCHES)
--"X--"	RECTANGULAR DUCTWORK (INCHES)
	ROUND FLEXIBLE DUCT
	SQUARE TO ROUND TRANSITION
	SINGLE LINE RIGID DUCT
	SINGLE LINE RIGID DUCT (ACOUSTICALLY LINED)
	DOUBLE LINE RIGID DUCT
	DOUBLE LINE RIGID DUCT (ACOUSTICALLY LINED)
	EXISTING DUCTWORK
FD	FIRE DAMPER
SD	SMOKE DAMPER
FSD	FIRE/SMOKE DAMPER
	MOTORIZED DAMPER (OPPOSED BLADE TYPE)
	MOTORIZED DAMPER (PARALLEL BLADE TYPE)
	BACKDRAFT DAMPER
	MANUAL VOLUME DAMPER
RVD	REMOTE VOLUME DAMPER
SD	SMOKE DETECTOR
T	THERMOSTAT
H	HUMIDISTAT
S	SENSOR
CO	CARBON DIOXIDE SENSOR
CO	CARBON MONOXIDE SENSOR
U	DOOR UNDERCUT
FS	FLOW SWITCH

CHR	CHILLED WATER RETURN PIPING
CHS	CHILLED WATER SUPPLY PIPING
CR	CONDENSER WATER RETURN PIPING
CS	CONDENSER WATER SUPPLY PIPING
HWR	HEATING WATER RETURN PIPING
HWS	HEATING WATER SUPPLY PIPING
RL	REFRIGERANT LIQUID PIPING
RS	REFRIGERANT SUCTION PIPING
CD	CONDENSATE DRAIN PIPING
PC	PUMPED CONDENSATE DRAIN PIPING
	CIRCUIT SETTER
	2-WAY ELECTRONIC CONTROL VALVE
	3-WAY ELECTRONIC CONTROL VALVE
	2-WAY PNEUMATIC CONTROL VALVE
	3-WAY PNEUMATIC CONTROL VALVE
	SOLENOID VALVE
	BUTTERFLY VALVE
	PLUG VALVE
	BALL VALVE
	CHECK VALVE
	GATE VALVE
	HOSE END DRAIN VALVE
	PRESSURE REDUCING VALVE
	RELIEF VALVE
	TEMPERATURE PRESSURE RELIEF VALVE
	THERMOMETER
	PRESSURE GAUGE WITH GAUGE COCK
	MANUAL AIR VENT
	PRESSURE TEMPERATURE PORT
	Y-STRAINER WITH BLOWDOWN
	PIPE GUIDE
	UNION
	PIPE ANCHOR
	FLEXIBLE CONNECTOR
	PIPE CAP/STUB-OUT
	DIRECTION OF FLOW
	PIPE DOWN
	PIPE UP
	PIPE TEE UP
	PIPE TEE DOWN

MECHANICAL ABBREVIATIONS

NOTE: THIS IS A MASTER SCHEDULE. NOT ALL ABBREVIATIONS CONTAINED HEREIN MAY APPEAR ON THE DRAWINGS.

AABC	AMERICAN AIR BALANCE COUNCIL
ACD	AUTOMATIC CONTROL DAMPER
AFF	ABOVE FINISHED FLOOR
AP	ACCESS PANEL
ASHRAE	AMERICAN SOCIETY OF HEATING, REFRIGERATION, AND AIR CONDITIONING ENGINEERS
ASPE	AMERICAN SOCIETY OF PLUMBING ENGINEERS
BFD	BACKFLOW PREVENTION DEVICE
BFF	BELOW FINISHED FLOOR
BHP	BRAKE HORSE POWER
BTUH	BRITISH THERMAL UNIT PER HOUR
CFM	CUBIC FEET PER MINUTE
CHAR	CHARACTERISTICS
CHR	CHILLED WATER RETURN
CHS	CHILLED WATER SUPPLY
CR	CONDENSER WATER RETURN
CS	CONDENSER WATER SUPPLY
D	DRAIN
DB	DRY BULB TEMPERATURE
DDC	DIRECT DIGITAL CONTROL
DIA	DIAMETER
DN	DOWN
DX	DIRECT EXPANSION
(E)	EXISTING TO REMAIN
EA	EXHAUST AIR
EAT	ENTERING AIR TEMPERATURE
EER	ENERGY EFFICIENCY RATIO
EFF	EFFICIENCY
ELEC	ELECTRICAL
ESP	EXTERNAL STATIC PRESSURE
EWT	ENTERING WATER TEMPERATURE
°F	FAHRENHEIT
FD	FIRE DAMPER
FPM	FEET PER MINUTE
FSD	FIRE/SMOKE DAMPER
GA	GAGE OR GAUGE
GAL	GALLONS
GPM	GALLONS PER MINUTE
GR	GLYCOL RETURN
GS	GLYCOL SUPPLY
HD	HEAD
HP	HORSEPOWER
HR	HOUR
HSPF	HEATING SEASONAL PERFORMANCE FACTOR
HWR	HEATING HOT WATER RETURN
HWS	HEATING HOT WATER SUPPLY
IBC	INTERNATIONAL BUILDING CODE
IMC	INTERNATIONAL MECHANICAL CODE
IPC	INTERNATIONAL PLUMBING CODE
KW	KILOWATT
LAT	LEAVING AIR TEMPERATURE
LBS	POUNDS
LWT	LEAVING WATER TEMPERATURE
MAX	MAXIMUM
MBH	ONE THOUSAND BTUH
MCA	MINIMUM CIRCUIT AMPS
MIN	MINIMUM
MOCP	MAXIMUM OVER CURRENT PROTECTION
MVD	MANUAL VOLUME DAMPER
N/A	NOT APPLICABLE
NC	NORMALLY CLOSED
NEBB	NATIONAL ENVIROMENTAL BALANCING BUREAU
NEC	NATIONAL ELECTRIC CODE
NFPA	NATIONAL FIRE PROTECTION ASSOCIATION
NIC	NOT IN CONTRACT
NO	NORMALLY OPEN
NTS	NOT TO SCALE
OA	OUTSIDE AIR
OAT	OUTSIDE AIR TEMPERATURE
OBD	OPPOSED BLADE DAMPER
OED	OPEN END DUCT
OFCI	OWNER FURNISHED, CONTRACTOR INSTALLED
PD	PRESSURE DROP
PRV	PRESSURE REDUCING VALVE
PSI	POUNDS PER SQUARE INCH
PSIA	POUNDS PER SQUARE INCH ABSOLUTE
PSID	POUNDS PER SQUARE INCH DIFFERENTIAL
PSIG	POUNDS PER SQUARE INCH GAUGE
(R)	EXISTING TO BE RELOCATED
RA	RETURN AIR
RH	RELATIVE HUMIDITY
RL/S	REFRIGERANT LIQUID/SUCTION
RPM	REVOLUTIONS PER MINUTE
RPPA	REDUCED PRESSURE PRINCIPAL ASSEMBLY
RVD	REMOTE VOLUME DAMPER
SA	SUPPLY AIR
SD	SMOKE DAMPER
SEER	SEASONAL ENERGY EFFICIENCY RATIO
"SP	STATIC PRESSURE (INCHES OF)
SPECS	SPECIFICATIONS
SQ	SQUARE
SQFT	SQUARE FEET
SS	STAINLESS STEEL
T	TEMPERATURE
TAB	TEST AND BALANCE WORK AND REPORT
TSP	TOTAL STATIC PRESSURE
TYP	TYPICAL
UBC	UNIFORM BUILDING CODE
UMC	UNIFORM MECHANICAL CODE
UON	UNLESS OTHERWISE NOTED
UPC	UNIFORM PLUMBING CODE
V/PH/HZ	VOLTAGE/PHASE/HERTZ
VFD	VARIABLE FREQUENCY DRIVE
WB	WET BULB TEMPERATURE
WG	WATER GAUGE
WMS	WIRE MESH SCREEN
(X)	EXISTING TO BE REMOVED

DRAWING INDEX

IMEG
370 E. WINDMILL LANE
SUITE 100, LAS VEGAS, NV
89123
PH: 702.896.1100
www.imegcorp.com
IMEG #23002690.00

PROFESSIONAL ENGINEER - STATE OF NEVADA
DUSTIN T. HART
Exp. 6/30/2023
MECHANICAL
NO. 24362

JUN 16 2023

IZ design studio
design...sustainability...architecture.
tel. 702.441.0026
Fax. 702.475.4755
www.izdesignstudio.com
7229 W. Sahara Ave Suite 100
Las Vegas, NV 89117
Nevada

SYMBOL LIST AND ABBREVIATIONS

SNHD BEHAVIORAL HEALTH 2

278 S. DECATUR BLVD
LAS VEGAS, NV 89107

Sheet Name

Project Name

DELTA NO.	REVISION NO.	DESCRIPTION	DATE

Project Number	21479
Date	06.16.2023
Drawn By	IMEG
Checked By	PE

M000

MECHANICAL SPECIFICATIONS

PART ONE - GENERAL

1. THE OWNER HAS CONTRACT LANGUAGE THAT NEEDS TO BE READ PRIOR TO BID SUBMISSION AS THERE ARE ITEMS THAT MAY SUPPLEMENT OR SUPERSEDE ITEMS NOTED HEREIN. THE OWNER'S CONTRACT DOCUMENTS HAS INFORMATION ON HOW WORK IS TO BE PERFORMED, HOW DOCUMENT SUBMITTALS ARE PROVIDED, RECORD DOCUMENTS ARE SUBMITTED, ETC. SEE THE ARCHITECTURAL DOCUMENTS FOR ADDITIONAL DIVISION 1 INFORMATION.
2. CODE USED IN DESIGN: IBC 2018, UMC -2018, UPC-2018, IECC-2018
3. ALL WORK SHALL BE DONE IN ACCORDANCE WITH THE LATEST ADOPTED EDITIONS OF THE APPLICABLE INTERNATIONAL BUILDING CODE (IBC), LOCAL MECHANICAL CODE (UMC, IMC, ETC.), LOCAL PLUMBING CODE (UPC, IPC, ETC.), NATIONAL ELECTRIC CODES (NEC) AND ALL OTHER APPLICABLE FEDERAL, STATE, AND LOCAL REGULATIONS.
4. THE CONTRACTOR MUST ARRANGE A VISIT TO THE WORK SITE PRIOR TO BID SUBMISSION TO FULLY UNDERSTAND THE EXISTING CONDITIONS. THE DRAWINGS ARE DIAGRAMMATIC AND SHOW THE WORK INTENT BUT NOT NECESSARILY ALL EXISTING OBSTRUCTIONS, PIPE OR DUCT BENDS. DETERMINING SITE CONDITIONS AND ADJUSTING THE INSTALLATION IS THE RESPONSIBILITY OF THE CONTRACTOR
5. THE CONTRACTOR SHALL PROVIDE THE WORK SHOWN ON THE DRAWINGS AND SPECIFIED FOR THEIR INDIVIDUAL SECTIONS OF WORK. THE WORD "WORK" SHALL MEAN ALL LABOR, TRANSPORTATION, MATERIAL, EQUIPMENT, TOOLS, INSTALLATION, SUPERVISION AND ANY OTHER INCIDENTAL ITEMS OR SERVICES NECESSARY FOR THE PROPER INSTALLATION AND OPERATION OF THE COMPLETE SYSTEMS, WHICH SHALL BE PROVIDED WHETHER OR NOT SPECIFICALLY INDICATED OR NOTED.
6. ALL GENERAL CONDITIONS, SPECIAL REQUIREMENTS OR GENERAL REQUIREMENTS OF THE CONSTRUCTION SPECIFICATIONS ARE MADE PART OF THIS SPECIFICATION AND HAVE THE SAME FORCE AND AFFECT AS IF COMPLETELY REPRODUCED.
7. THE WORD "PROVIDE" SHALL MEAN FURNISH AND INSTALL, MAKE ALL FINAL CONNECTIONS AND LEAVE IN AN APPROVED COMPLETE OPERATING CONDITION.
8. THE CONTRACTOR SHALL BE RESPONSIBLE FOR PAYING ALL FEES AND OBTAINING ALL PERMITS AND INSPECTIONS REQUIRED FOR THE WORK.
9. THE CONTRACTOR SHALL CAREFULLY EXAMINE ALL CONTRACT DOCUMENTS. THE CONTRACTOR SHALL COORDINATE THE WORK WITH ALL OTHER TRADES INCLUDING, BUT NOT LIMITED TO, THE CONTRACT DOCUMENTS, SHOP DRAWINGS, ETC. FOR ALL GENERAL CONSTRUCTION, STRUCTURAL, MECHANICAL, ELECTRICAL AND SPECIALTY CONTRACTOR WORK. THE CONTRACTOR SHALL BE RESPONSIBLE FOR THE PROPER FITTING OF MATERIAL INTO THE BUILDING AS PLANNED, WITHOUT INTERFERENCE WITH OTHER WORK, AND SHALL MAKE REASONABLE MODIFICATIONS IN THE LAYOUTS NEEDED TO PREVENT CONFLICT WITH OTHER TRADES, TO PROVIDE ACCESS AND FOR THE PROPER EXECUTION OF THE WORK.
10. DRAWINGS ARE DIAGRAMMATIC AND SCHEMATIC IN NATURE, AND INDICATE THE TYPE, SIZE, ARRANGEMENT AND LOCATION OF MATERIALS AND EQUIPMENT. WORK INCLUDES CERTAIN COMPONENTS, APPURTENANCES AND RELATED SPECIALTIES THAT MAY NOT BE SHOWN. CONTRACTOR SHALL PROVIDE ALL NECESSARY ITEMS TO COMPLETE THE WORK ACCORDING TO INDUSTRY STANDARDS. IT IS THE INTENT OF THE DRAWINGS AND SPECIFICATIONS TO CALL OUT FOR FINISHED WORK, TESTED AND READY FOR OPERATION. DO NOT SCALE DRAWINGS. ARRANGEMENT OF EQUIPMENT AND ROUTING OF PIPES AND DUCTWORK, ETC. INDICATED ON DRAWINGS SHALL BE ROUTED PLUMB AND AT RIGHT ANGLES TO BUILDING CONSTRUCTION AND MAY REQUIRE MODIFICATION DUE TO UNFORESEEN CONDITIONS AND REQUIRE ON SITE REVISIONS DURING CONSTRUCTION. (SEE ALSO "BIDDING").
11. ALL WORK REQUIRED FOR IDENTICAL/SIMILAR ITEMS SHOWN ON THE DRAWINGS SHALL BE PROVIDED, ALTHOUGH EACH SPECIFIC IDENTICAL/SIMILAR ITEM MAY NOT BE SHOWN IN DETAIL.
12. THE CONTRACTOR SHALL SUBMIT ELECTRONIC PDF SHOP DRAWINGS AND TECHNICAL DATA SHEETS FOR ALL EQUIPMENT AND MATERIALS SPECIFIED HEREIN TO THE ENGINEER. THE ENGINEER SHALL REVIEW SHOP DRAWINGS AND TECHNICAL DATA SHEETS FOR CONFORMANCE WITH THE CONTRACT DOCUMENTS AND ISSUE A WRITTEN ASSESSMENT TO THE OWNER PRIOR TO COMMENCEMENT OF WORK.
13. SPECIFIED EQUIPMENT SHALL BE CONSIDERED BASE BID. ANY APPROVED ALTERNATE MANUFACTURERS PRODUCT SHALL BE LISTED AS A FEE ADDITION/REDUCTION AS A SEPARATE LINE ITEM AT BID. A WRITTEN DESCRIPTION OF PRODUCT DIFFERENCES MUST BE PROVIDED FOR EVALUATION OR THE ALTERNATE PRODUCT WILL BE REJECTED. THE REQUIREMENTS OF PARA. 14.1 BELOW APPLIES TO PRE-APPROVED ALTERNATE MANUFACTURER EQUIPMENT. THE CONTRACTOR SHALL BE RESPONSIBLE FOR ALL ENGINEERING FEES NECESSARY TO CHANGE PERMIT DOCUMENTS BASED ON ALTERNATE SUBMITTAL PACKAGES/EQUIPMENT SUBSTITUTIONS.
14. ALL SUBSTITUTIONS SHALL BE SUBMITTED TO THE ENGINEER FOR CONSIDERATION PRIOR TO BIDDING. THE PROPOSED SUBSTITUTE PRODUCT SHALL BE LISTED AS A FEE ADDITION/REDUCTION. A WRITTEN DESCRIPTION OF PRODUCT AND INSTALLATION DIFFERENCES MUST BE PROVIDED FOR EVALUATION OR THE SUBSTITUTE PRODUCT WILL BE REJECTED. THE OWNER'S REPRESENTATIVE SHALL PRE-APPROVE ANY PROPOSED SUBSTITUTION IN WRITING. IF APPROVED, THE PRODUCT FALLS UNDER THE RULES OF PARA. 13 ABOVE.
    - 14.1. THE CONTRACTOR SHALL BE RESPONSIBLE FOR COORDINATING ALL REQUIREMENTS ASSOCIATED WITH SUBSTITUTED EQUIPMENT OR MATERIALS WITH OTHER BUILDING TRADES, INCLUDING, BUT NOT LIMITED TO, ELECTRICAL, STRUCTURAL, OR ARCHITECTURAL ELEMENTS. SUBSTITUTED EQUIPMENT, ANYTHING DIFFERENT FROM SPECIFIED ON THE DOCUMENTS, MUST BE IDENTIFIED AS SUCH DURING THE SUBMITTAL PROCESS. THE CONTRACTOR SHALL IDENTIFY AND ANNOTATE ALL REVISED REQUIREMENTS PER BUILDING TRADE ON THE SHOP DRAWINGS. THE CONTRACTOR SHALL ALSO IDENTIFY ALL COSTS, DEBITS OR CREDITS, IN WRITING FOR THE PROPOSED CHANGES PER BUILDING TRADE.
15. SHOP DRAWING REVIEW DOES NOT RELIEVE THE CONTRACTOR FROM BASE BID, ALTERNATE OR SUBSTITUTE EQUIPMENT COORDINATION REQUIREMENTS.
16. UPON COMPLETION OF CONSTRUCTION,
    - 16.1. THE CONTRACTOR SHALL SUPPLY THE ENGINEER WITH AN ELECTRONIC CAD AND PDF SET OF AS-BUILT DOCUMENTS ACCURATELY SHOWING THE MATERIALS AND EQUIPMENT AS INSTALLED.
    - 16.2. THE CONTRACTOR SHALL PROVIDE THE BUILDING OWNER OR REPRESENTATIVE WITH AN ELECTRONIC (PDF) MANUAL WITH DETAILED OPERATING AND MAINTENANCE INSTRUCTIONS FOR EACH PIECE OF EQUIPMENT PROVIDED, WITH CONTENT MEETING THE REQUIREMENTS NOTED BELOW:
        - 16.2.1. SUBMITTAL DATA STATING EQUIPMENT SIZE AND SELECTED OPTIONS.
        - 16.2.2. MANUFACTURER'S OPERATION MANUALS AND MAINTENANCE MANUALS. REQUIRED ROUTINE MAINTENANCE ACTIONS SHALL BE CLEARLY IDENTIFIED.
        - 16.2.3. NAME, ADDRESS AND CONTACT NUMBER FOR AT LEAST ONE SERVICE AGENCY.
        - 16.2.4. HVAC AND SERVICE HOT WATER CONTROLS SYSTEM MAINTENANCE AND CALIBRATION INFORMATION, INCLUDING WIRING DIAGRAMS, SCHEMATICS AND CONTROL SEQUENCE DESCRIPTIONS. DESIRED OR FIELD DETERMINED SET-POINTS SHALL BE PERMANENTLY RECORDED ON A CONTROLS DRAWING AT CONTROL DEVICES OR IN SYSTEM PROGRAMMING INSTRUCTIONS.
        - 16.2.5. A NARRATIVE OF HOW EACH SYSTEM IS INTENDED TO OPERATE, INCLUDING RECOMMENDED SET-POINTS.
        - 16.2.6. COPIES OF GUARANTIES AND/OR WARRANTIES.
17. ALL MATERIALS AND WORKMANSHIP SHALL BE GUARANTEED FOR A MINIMUM OF ONE (1) YEAR FROM DATE OF ACCEPTANCE BY OWNER. REFRIGERATION COMPRESSORS SHALL BE GUARANTEED FOR A MINIMUM OF FIVE (5) YEARS FROM DATE OF OWNER'S ACCEPTANCE. IN ADDITION, THE CONTRACTOR SHALL GUARANTEE THAT THE INSTALLATION WHEN OPERATED IN ACCORDANCE WITH THE CONTRACTOR'S INSTRUCTIONS WILL DEVELOP CAPACITY AND CHARACTERISTICS AS SPECIFIED AND WILL FULFILL EACH AND EVERY REQUIREMENT OF THE DRAWINGS AND SPECIFICATIONS. SHOULD THE INSTALLATION IN ANY WAY FAIL TO DO SO, THE CONTRACTOR WILL, WITHOUT DELAY AND WITHOUT COST TO THE OWNER, PROVIDE WHATEVER ADDITIONAL EQUIPMENT, MATERIAL, AND LABOR REQUIRED TO CORRECT THE DEFICIENCY AND COMPLY WITH THE REQUIREMENTS OF THE DRAWINGS AND SPECIFICATIONS.
18. CONTRACTOR SHALL CHECK AND VERIFY ALL SIZES, DIMENSIONS, AND CONDITIONS BEFORE STARTING ANY WORK. ANY DEVIATIONS OR PROBLEMS SHALL BE TRANSMITTED TO THE ENGINEER FOR REVIEW.
19. PROVIDE BASE AND COUNTER FLASHING FOR ITEMS PENETRATING THE ROOF OR EXTERIOR WALLS.
20. STARTERS, VFDs DISCONNECT SWITCHES AND CONTROLS FOR MOTORS IF NOT UNIT MOUNTED AND/OR SUPPLIED BY THE EQUIPMENT MANUFACTURER, UNLESS NOTED SPECIFICALLY OTHERWISE SHALL FOLLOW:
    - 20.1. VFDs TO BE SUPPLIED BY THE MECHANICAL CONTRACTOR AND INSTALLED BY THE ELECTRICAL CONTRACTOR. FINAL LOCATIONS COORDINATED WITH THE ENGINEER. WIRING BETWEEN THE VFD AND THE MOTOR SHALL BE SHIELDED POWER CABLE DESIGNED FOR VFD APPLICATIONS, GROUNDED AT BOTH ENDS.
    - 20.2. UNLESS NOTED OTHERWISE, LOOSE MOTOR STARTERS, COMBINATION STARTERS, DISCONNECT SWITCHES, MOTOR RATED SWITCHES, TOGGLE SWITCHES, ETC. TO BE SUPPLIED AND INSTALLED BY THE ELECTRICAL CONTRACTOR.
    - 20.3. CONTROL AND INTERLOCKING WIRING SHALL BE FURNISHED AND INSTALLED BY CONTRACTOR PERFORMING CONTROLS WORK. (SEE AUTOMATIC TEMPERATURE CONTROLS SECTION FOR ADDITIONAL INFORMATION WITH REGARD TO THIS WIRING RULE.)
21. ALL WORK SHOWN IS NEW UNLESS NOTED OTHERWISE.
22. MAINTAIN OCCUPANCY AND FIRE WALL SEPARATION INTEGRITY AS REQUIRED. REFER TO ARCHITECTURAL PLANS FOR LOCATIONS OF ALL OCCUPANCY/FIREWALL SEPARATIONS AND SPECIFIC DETAILS FOR CONSTRUCTION. PROVIDE ALL NECESSARY FIRE AND SMOKE FIRE DAMPERS, ACCESS DOORS, CAULKING, ETC. FOR APPROVED INSTALLATION.
23. IECC COMPLIANCE: THE CONTRACTOR IS RESPONSIBLE FOR COMPLYING WITH AND PERFORMING ALL REQUIREMENTS AND WORK SET FORTH IN THE IECC COMPLIANCE CERTIFICATE THAT IS INCLUDED IN THESE DOCUMENTS.

BIDDING

1. THE CONTRACTOR SHALL VISIT THE SITE PRIOR TO SUBMITTING A BID TO BECOME FAMILIAR WITH THE EXISTING CONDITIONS. THE CONTRACTOR SHALL COMPARE THE WORK SPECIFIED IN THE CONTRACT DOCUMENTS WITH THE EXISTING CONDITIONS. THE CONTRACTOR SHALL IDENTIFY AND NOTATE ALL WORK OR CONDITIONS THAT ARE DIFFERENT FROM THE CONTRACT DOCUMENTS OR THEIR INTENT. THE CONTRACTOR SHALL, UPON DISCOVERY, IMMEDIATELY NOTIFY AND REPORT, IN WRITING, ANY DISCREPANCIES TO THE ENGINEER. NO EXTRAS OR CHANGE ORDERS WILL BE ALLOWED FOR FAILURE TO PERFORM THE PRE-BID SITE VISIT.
2. BASE PROPOSAL ON MANUFACTURER NAMES LISTED UNLESS "OR EQUAL" IS INDICATED. PROVIDE SUBSTITUTION REQUESTS A MINIMUM OF FIVE (5) BUSINESS DAYS PRIOR TO BID DATE CLOSING TO ALLOW TIME FOR DUE CONSIDERATION OF PROPOSED ALTERNATE. DETERMINATION OF SUBSTITUTION OF EQUALITY RESTS SOLELY WITH THE ENGINEER.

PART TWO - PRODUCTS

HVAC EQUIPMENT

1. PROVIDE HVAC EQUIPMENT AS SPECIFIED AND/OR SCHEDULED HEREIN AND IN ACCORDANCE WITH MANUFACTURER'S PUBLISHED INSTALLATION INSTRUCTIONS. EQUIPMENT SHALL OPERATE ACCORDING TO THE MANUFACTURER'S "OWNER'S OPERATING AND MAINTENANCE MANUAL" TROUBLE-FREE PRIOR TO STARTING TEST AND BALANCE (TAB) WORK.

DUCTWORK

1. DUCTWORK, UNLESS LISTED OTHERWISE IN THIS SECTION, SHALL BE ASTM A653/A653M GALVANIZED SHEET METAL, LOCK-FORMING QUALITY HAVING A ZINC COATING OF 0.90 OZ PER SQ. FT. (G90) EQUALLY APPLIED TO EACH SURFACE, TESTED PER ASTM A90. DUCTWORK IS TO BE INSTALLED ACCORDING TO ASHRAE RECOMMENDATIONS AND SMACNA DUCT CONSTRUCTION STANDARDS. NO SHEETMETAL DUCTWORK TO BE LESS THAN 26 GA.
2. ROUND DUCTWORK: 8"Ø AND UNDER CAN BE SPIRAL OR SNAP-LOCK, >8"Ø TO BE SPIRAL CONSTRUCTION.
3. PROVIDE MANUAL VOLUME DAMPERS WITH LOCKING QUADRANTS AND IDENTIFYING RIBBONS AT DAMPER HANDLES FOR AIR BALANCING EACH BRANCH DUCT TAKE-OFF OR PIECE OF AIR DISTRIBUTION EQUIPMENT. NOT ALL DAMPERS MAY BE INDICATED ON THE DOCUMENTS.
4. SEAL ALL DUCT PENETRATIONS THROUGH WALLS, FLOOR AND ROOF. SEAL ALL TRANSVERSE DUCT SEAMS WITH APPROVED MASTIC. DUCT TAPES SHALL NOT BE ALLOWED FOR RIGID DUCTWORK.
5. SUPPLY, OUTSIDE AIR AND RETURN DUCTWORK SHALL BE INSULATED WITH FLEXIBLE GLASS FIBER INSULATION MEETING ANSI/ASTM C612, MAXIMUM 'K' VALUE OF 0.29 AT 75°F, WITH FOIL-KRAFT FLAME RESISTANT VAPOR BARRIER, MINIMUM 3/4 #/CUFT. DENSITY. BELOW ARE MINIMUM R VALUES FOR DUCTWORK INSULATION WHERE NOT OTHERWISE SPECIFICALLY SPECIFIED, PER ASHRAE 90.1-2016.

5.1. SUPPLY/RETURN - HEATING & COOLING

CLIMATE ZONE	EXTERIOR, ATTICS, PARKING GARAGE, CRAWL SPACE.	UNCONDITIONED & BURIED DUCTS	INDIRECTLY CONDITIONED, RETURN AIR PLENUM. (C) (NO INSUL. ON RETURN)
0 TO 4	R-8	R-6	R-1.9
5 TO 8	R-12	R-6	R-1.9

5.2. SUPPLY/RETURN - HEATING ONLY

CLIMATE ZONE	EXTERIOR, ATTICS, PARKING GARAGE, CRAWL SPACE.	UNCONDITIONED & BURIED DUCTS	INDIRECTLY CONDITIONED, RETURN AIR PLENUM. (C) (NO INSUL. ON RETURN)
0 TO 1	NONE	NONE	NONE
2 TO 4	R-6	R-6	R-1.9
5 TO 8	R-12	R-6	R-1.9

5.3. SUPPLY/RETURN - COOLING ONLY

CLIMATE ZONE	EXTERIOR, ATTICS, PARKING GARAGE, CRAWL SPACE.	UNCONDITIONED & BURIED DUCTS	INDIRECTLY CONDITIONED, RETURN AIR PLENUM. (C) (NO INSUL. ON RETURN)
0 TO 6	R-8	R-6	R-1.9
7 TO 8	R-1.9	R-1.9	R-1.9

5.4. GENERAL NOTES

- A. INTERIOR RETURN DUCTWORK, IN INDIRECTLY CONDITIONED RETURN AIR PLENUM SPACE - NO INSULATION REQUIRED.
- B. EXTERIOR DUCTWORK TO BE INSULATED WITH URETHANE OR POLYSTYRENE FOIL FACED RIGID BOARD, TOP OF DUCT TO HAVE A WATERSHED DESIGN, A WEATHER PROOF COVER IS TO BE APPLIED USING MFM FLEXCLAD-400 (ALUMINIUM).
- C. SUPPLY DUCTWORK TO HAVE A MINIMUM OF 1.5" OF INSTALLED THICKNESS INSULATION REGARDLESS OF LOCATION.
- D. D. IN HUMID LOCATIONS, SUCH AS POOLS, DUCT INSULATION SHALL BE AP ARMAFLEX (ASTM E 84 25/50 RATED), TWO LAYERS, OVERLAPPING SEAMS, 1.5 TO 2" TOTAL THICKNESS).

6. ALL DUCTWORK SIZES SHOWN ARE FREE AREA DIMENSIONS. EXHAUST DUCTWORK SHALL BE UNINSULATED.
7. THE INTERIOR OF SUPPLY AND RETURN DUCTWORK VISIBLE BEHIND DEVICES (GRDs), SHALL BE PAINTED FLAT BLACK.
8. LINE DUCTWORK FIFTEEN FEET UPSTREAM AND DOWNSTREAM OF ALL FANS (EXCEPT FOR TYPE I KITCHEN HOOD, TYPE II DISHWASHER EXHAUST OR EVAPORATIVE COOLING) AND WHERE INDICATED WITH 1" THICK, 1.5# DENSITY DUCT LINER. LINING SHALL BE APPLIED TO DUCTWORK WITH FIRE RESISTANT ADHESIVES, (FOSTER 85-10 OR EQUAL) AND COPPER OR CADMIUM PLATED MECHANICAL FASTENERS, (GRAHAM, OMARK OR EQUAL). ALL DUCT SIZES INDICATED ARE CLEAR INSIDE.
9. FLEXIBLE DUCTWORK WHERE INDICATED ON THE DRAWINGS SHALL BE INSULATED, WITH PLASTIC VAPOR BARRIER AT INTERIOR AND EXTERIOR, STEEL WIRE COIL REINFORCED. JOINTS SHALL BE BAND-CLAMPED, MASTIC-DUCT SEALER AND TAPE SEALED TO MAINTAIN INTEGRITY OF VAPOR BARRIER. FLEXIBLE INSTALLATION SHALL BE SUPPORTED TO ELIMINATE SAGS. FLEXIBLE GLASS FIBER INSULATION SHALL HAVE A MAXIMUM 0.23 K VALUE AT 75°F. INSTALLATION SHALL MEET ASHRAE & SMACNA STANDARDS. UNLESS NOTED OTHERWISE MAXIMUM LENGTH IS 5'-0" AND TWO 45° BENDS.
10. FIRE DAMPERS SHALL BE DYNAMIC (RATED FOR SYSTEM VELOCITY) AND MEET UL 555 AND SHALL HAVE BLADES OUT OF AIR STREAM IN COILED POSITION. FUSIBLE LINK SHALL BE RATED AT 165°F.
11. COMBINATION FIRE/SMOKE DAMPERS SHALL BE DYNAMIC (RATED TO SYSTEM VELOCITY) MEET UL 555S.
12. DUCTWORK TO BE CONSTRUCTED TO SMACNA AND ASHRAE DUCT CONSTRUCTION STANDARDS.

DUCTWORK SYSTEMS: (4)	SMACNA CLASS		LEAKAGE CLASS (5)	
	PRESSURE (3)	SEAL	ROUND	RECT.
CONSTANT VOLUME	2	A	2	4
VARIABLE VOLUME (1)	1	A	2	4
VARIABLE VOLUME (2)	3	A	2	4
RETURN	2	B	4	8
EXHAUST (NEGATIVE)	2	B	4	8
EXHAUST (POSITIVE)	3	A	2	4

PRESSURE CLASS OPTIONS: 1/2", 1", 2", 3", 4", 6" 10"

NOTE (1): DOWNSTREAM OF VAV BOX

NOTE (2): UPSTREAM OF VAV BOX

NOTE (3): THESE ARE MINIMUMS, REFER TO EQUIPMENT SCHEDULES & SUBMITTAL DOCUMENTS, IF ESP MEETS OR EXCEEDS THESE FIGURES, INCREASE PRESSURE CLASS TO NEAREST CLASS THAT IS 0.5" W.C. OVER THE LISTED ESP. WHERE INFORMATION IS NOT PROVIDED THE CONTRACTOR MUST SUBMIT A RFI.

NOTE (4): WHEN USED AS PART OF A SMOKE CONTROL OR REMOVAL SYSTEM SHALL, AT A MINIMUM, BE SMACNA PRESSURE CLASS 3, SEAL CLASS A

NOTE (5): LEAKAGE CLASS IS CFM LEAKAGE/100 SQ.FT. @ 1" H_2O

NOTE (6): UNLESS NOTED OTHERWISE FUME EXHAUST DUCTS AND SUPPORTS TO BE FABRICATED FROM 316 STAINLESS STEEL, MINIMUM 18-GA. SEAMS AND JOINTS TO BE WELDED LIQUID/AIR TIGHT.

DUCTWORK ELBOWS:

ROUND:

FPM	MINIMUM RADIUS/DIA RATIO
TO 1000	0.75
1,001 TO 1,500	1
1,500+	1.5(2)

RECTANGULAR:

	ASPECT RATIO, W/D					
R/D	0.25	0.5	1	2	3	4
0.0 (3)	(1)	(1)	(1)	(1)	(1)	(1)
0.5	(1)	(1)	(1)	(1)	(1)	(1)
1	(1)	(1)	(1)	(1)	(1)	(1)
1.5 (2), (5)	(1)	(1)	(4)	(4)	(4)	(4)
2	(1)	(4)	(4)	(4)	(4)	(4)
3	(1)	(4)	(4)	(4)	(4)	(4)

NOTE (1):MUST HAVE AIRFOIL TURNING VALVES

NOTE (2):STANDARD/DEFAULT CENTERLINE RADIUS

NOTE (3):MITRED ELBOW

NOTE (4):TURNING VANES NOT REQUIRED

NOTE (5):THIS R/D MUST BE USED FOR TYPE I GREASE DUCTS, TURNING VANES NOT ALLOWED

MECHANICAL PRODUCTS

1. DIFFUSERS, REGISTERS AND GRILLES: MAXIMUM SOUND PRESSURE LEVELS SHALL NOT EXCEED NC 30. COORDINATE FINISH AND MOUNTING TYPE WITH ARCHITECT. ACCEPTABLE MANUFACTURERS: TITUS, NAILOR, KRUEGER, TUTTLE AND BAILEY, PRICE
2. CONTROL DAMPERS: LEAKAGE CLASS 1A/1. EQUAL TO RUSKIN CD-60 (CD-50 IN WET LOCATIONS)
3. PIPE HANGERS: PIPE SIZES 1/2" TO 1 1/2": MALLEABLE IRON, CARBON STEEL, ADJUSTABLE SWIVEL, SPLIT RING. PIPE SIZES OVER 2" (UNLESS NOTED OTHERWISE): CARBON STEEL, ADJUSTABLE, CLEVIS. PIPE SIZES CHILLED WATER 8" AND OVER, HEATING WATER 6" AND OVER, STEAM (SUPPLY & CONDENSATE) 4" AND OVER: ADJUSTABLE STEEL YOKE, CAST IRON ROLL, DOUBLE HANGER. SYSTEM LOAD (PIPE FULL OF DESIGN LIQUID OR GAS) ON HANGER MUST NOT EXCEED MORE THAN 85% OF HANGER CAPACITY.
4. PIPING:
    - 4.1. HYDRONIC WATER PIPING (ABOVE GROUND) - SCHEDULE 40 STEEL (ASTM A53), MALLEABLE IRON OR FORGED STEEL WELDED TYPE FITTINGS, SCREWED OR WELDED JOINTS; OR TYPE L HARD DRAWN COPPER TUBING (ASTM B88), CAST BRASS OR SOLDER WROUGHT COPPER FITTINGS, SOLDER GRADE 95TA JOINTS. PIPING OVER 2" SHALL BE STEEL WITH WELDED JOINTS.
    - 4.2. EQUIPMENT DRAIN OVERFLOWS AND CONDENSATE DRAIN PIPING: TYPE "M" COPPER (ASTM B-88), WROUGHT FITTINGS (ASME B16.22), JOINTS: ANSI/ASTM B32, SOLDER: 95/5 TIN/ANTIMONY, 0.2% MAX LEAD
5. VALVES: PROVIDE THE NAME OF MANUFACTURER AND GUARANTEED WORKING PRESSURE CAST OR STAMPED ON VALVE BODIES AND BE BY SINGLE MANUFACTURER FOR SIMILAR TYPE. ACCEPTABLE MANUFACTURERS: BRAY, MILWAUKEE, STOCKHAM, NIBCO, APOLLO. UNLESS NOTED OTHERWISE:
    - 5.1. CALIBRATED BALANCING VALVES: OVENTROP VTR OR VFC.
    - 5.2. DYNAMIC BALANCING VALVES: HAYS MESURFLO 2524.
    - 5.3. PROVIDE A 20 MESH SCREEN Y-STRAINER BEFORE ANY CALIBRATED OR DYNAMIC BALANCING VALVE.
6. PIPE INSULATION: GLASS FIBER INSULATION WITH A MAXIMUM K VALUE NOTED BELOW AT 75 DEGREES F. OUTDOOR INSULATION THICKNESS SHALL BE DOUBLE INDOOR THICKNESS WITH A MAXIMUM THICKNESS OF 5". INTERIOR APPLICATIONS SHALL HAVE KRAFT REINFORCED FOIL VAPOR BARRIER WITH ONE PIECE PREMOLDED PVC JACKETS FOR FITTINGS. EXTERIOR APPLICATIONS SHALL HAVE STUCCO EMBOSSED ALUMINUM JACKETS. ACCEPTABLE MANUFACTURERS: OWENS CORNING, CERTAINTEED, JOHNS MANVILLE, KNAUF.

FLUID TEMP RANGE °F	INSUL. CONDUCTIVITY BTU-IN/(HR-SQ.FT.-°F)	INSULATION THICKNESS NOMINAL PIPE SIZE (IN) <1.5	1.5 & >
> 350	0.32	5	5
251-350	0.29	4	4.5
201-250	0.27	2.5	3
141-200	0.25	1.5	2
< 140	0.22	1	1.5

OUTER INSUL. DIAMETER	MINIMUM ALUMINUM JACKET THICKNESS (INCHES) RIGID INSULATION	NON-RIGID INSULATION
≤ 8"	0.016	0.016
> 8"-11"	0.016	0.020
> 11"-24"	0.016	0.024
> 24"-36"	0.020	0.032
> 36"	0.024	0.040

- 6.1. WHERE THE CLIMATE DICTATES, CONDENSATE DRAIN PIPING TO BE INSULATED.
- 6.2. PROVIDE METAL SADDLES AND RIGID INSULATION AT HANGERS WHERE SYSTEM WEIGHT COMPRESSES INSULATION.

7. VARIABLE AIR VOLUME TERMINAL BOXES: UNIT SHALL BE 22-GAGE GALVANIZED STEEL WITH 13/16", 4 LBS./CU. FT. FOIL FACED DUCT BOARD INSULATION INTERIOR LINER WITH AN R VALUE OF 3.5SQ.FT. °F HR/BTU @ 75°F, CODE COMPLIANCE WITH: UL 723 - FLAME/SMOKE (25/50), UL 181 AIR EROSION, MOLD GROWTH & HUMIDITY, ASTM 1338, G21, G22 FUNGI RESISTANCE. UNIT SHALL BE ARI 880 CERTIFIED. AIR VALVE SHALL HAVE A MULTIPLE POINT AVERAGING FLOW SENSING DEVICE. IF SCHEDULED, THE ELECTRIC HEATING COIL SHALL BE FACTORY INSTALLED WITH AIRFLOW SWITCH, THERMAL PRIMARY CUTOUT, MANUAL RESET, DISCONNECT SWITCH, AND MAGNETIC CONTACTOR. PROVIDE SPACE TEMPERATURE SENSOR, CONTROL WIRING AND TRANSFORMER. ACCEPTABLE MANUFACTURERS: TRANE, TITUS, ENVIROTECH, PRICE.
8. DUCT MOUNTED SMOKE DETECTORS:
    - 8.1. WHEN THE DUCT TYPE SMOKE DETECTOR IS REQUIRED TO BE PART OF THE DESIGN BUILD FIRE ALARM SYSTEM: SHALL BE FURNISHED BY THE FIRE ALARM CONTRACTOR, INSTALLED BY THE MECHANICAL CONTRACTOR AND WIRED BY THE FIRE ALARM CONTRACTOR
    - 8.2. WHEN THE DUCT TYPE DETECTOR IS NOT PART OF THE FIRE ALARM SYSTEM: THE DUCT MOUNTED SMOKE DETECTORS SHALL BE FURNISHED, INSTALLED AND WIRED BY THE MECHANICAL CONTRACTOR. (NORMALLY PROVIDED AT 24 VAC.)
    - 8.3. DUCT MOUNTED SMOKE DETECTORS SHALL BE INSTALLED ON AIR MOVING EQUIPMENT THAT EXCEEDS 2,000 CFM AND ON AIR MOVING EQUIPMENT UNDER 2,000 CFM THAT SUPPLIES A COMMON SPACE AND THE TOTAL CFM CAPACITY OF THE EQUIPMENT SERVING THE SPACE EXCEEDS 2,000 CFM.
    - 8.4. DUCT MOUNTED DETECTORS SHALL BE WIRED TO SHUT DOWN THE ASSOCIATED AIR MOVING EQUIPMENT ON ALARM.
    - 8.5. DETECTORS TO BE MOUNTED IN THE SUPPLY AIR DUCTWORK.
9. FANS: EXTERIOR: PROVIDE WITH ROOF CURB WHERE APPLICABLE. PROVIDE DISCONNECT SWITCH - INTERIOR NEMA 1, EXTERIOR NEMA 4X; BELT DRIVEN FANS WITH NO VFD TO HAVE ADJUSTABLE PITCH SHEAVES. DIRECT DRIVE FANS TO HAVE A VFD OR EC MOTOR UNLESS NOTED OTHERWISE. ACCEPTABLE MANUFACTURERS: GREENHECK, COOK, TWIN CITY, ACME, PENN-BERRY.

AUTOMATIC TEMPERATURE CONTROLS

1. THE MECHANICAL CONTRACTOR SHALL PROVIDE A COMPLETE SYSTEM OF AUTOMATIC TEMPERATURE CONTROLS INTEGRATED INTO THE EXISTING BUILDING AUTOMATION SYSTEM (BAS, BMS, ATC, DDC). THIS SYSTEM SHALL INCLUDE BUT NOT BE LIMITED TO: TEMPERATURE SENSORS, CONTROLLERS, TRANSFORMERS, EQUIPMENT INTERFACE DEVICES AND ALL REQUIRED RELAYS, WIRING AND CONDUIT - REGARDLESS OF VOLTAGE.
2. THE MECHANICAL CONTRACTOR SHALL PROVIDE AND INSTALL, IN ACCORDANCE WITH THE NEC AND THIS PROJECT ELECTRICAL SPECIFICATIONS, ALL CONDUIT, WIRE, JUNCTION BOXES, THERMOSTAT BACK BOXES AND CIRCUIT BREAKERS REQUIRED FOR A FULLY OPERATIONAL ATC SYSTEM. 120V POWER, IF NOT PROVIDED, SHALL BE OBTAINED FROM LOCATIONS PROVIDED ON THE ELECTRICAL DESIGN DOCUMENTS - IF NO INFORMATION IS PROVIDED THE CONTRACTOR MUST ISSUE AN RFI DURING THE BID PROCESS TO CLARIFY.
3. WHERE AN EXISTING OR NEW BAS SYSTEM IS UTILIZED THE CONTRACTOR SHALL PROVIDE A GUI PAGE FOR EACH SYSTEM. GRAPHICS MUST MATCH OR EXCEED THE EXISTING FOR DETAIL AND INFORMATION PROVIDED.
4. SUBMIT SHOP DRAWINGS OF TEMPERATURE CONTROL WIRING, LOCATION OF DEVICES AND INSTALLATION DATA FOR REVIEW PRIOR TO INSTALLATION.

TEST AND BALANCE (TAB)

1. BALANCE ALL DUCTS, DIFFUSERS, AND GRILLES TO OBTAIN THE AIR QUANTITIES AS SHOWN ON PLANS. TEST AND BALANCE WORK SHALL BE PERFORMED BY AN INDEPENDENT, APPROVED, AND CERTIFIED AABC OR NEBB CONTRACTOR.
2. THE CONTRACTOR IS RESPONSIBLE FOR ADJUSTING DIFFUSER THROWS. LINEAR DIFFUSERS IN A HORIZONTAL CEILING SYSTEM WILL GENERALLY THROW AIR HORIZONTAL - SEE DWGS FOR DIRECTION ARROW. IF NO DIRECTION ARROW IS ILLUSTRATED THE CONTRACTOR MUST DIRECT AN RFI TO THE ENGINEER TO OBTAIN PROPER THROW DIRECTIONS.
3. THE TEST AND AIR BALANCE (TAB) REPORT SHALL INCLUDE DESIGN AIR QUANTITIES AND AIR QUANTITIES AFTER ADJUSTMENTS. FURNISH OWNER'S REPRESENTATIVE WITH A PDF COPY OF THE FINAL TAB REPORT.

NOTES

1. DIELECTRIC FITTINGS SHALL BE USED WHEREVER DISSIMILAR METALS ARE JOINED.
2. PROVIDE ACCESS PANELS IN CEILINGS & WALLS TO ACCESS MECHANICAL/PLUMBING EQUIPMENT AND APPURTENANCES WHERE REQUIRED. DRYWALL CEILINGS: GFRG OR BAUCO•PLUS II. DRYWALL WALLS: BAUCO•PLUS II. RATED DRYWALL WALLS OR CEILINGS: ACUDOR FW-5050-DW. MINIMUM SIZE FOR ACCESS OF EQUIPMENT: 24"x24" OR PER LOCAL CODE, WHICH EVER IS LARGER.
3. GAUGES: TEMPERATURE: INTERIOR - WEISS VARI-ANGLE DIGITAL WITH 316 SS THERMOWELL, EXTERIOR WITH DCV-4 OUTDOOR WATERPROOF COVER. PRESSURE: WEISS DIGITAL DUGY3-xxx-2L (PG - RFI FOR RANGE PER APPLICATION)
4. GAS REGULATORS SUPPLIED SHALL BE OF THE "LOCK UP" TYPE AND SHALL HAVE A STRAINER INSTALLED BEFORE THE REGULATOR. IN LOCATIONS WHERE SEISMIC OR BUILDING CODE REQUIREMENTS DICTATE AN EARTHQUAKE OR SIESMIC ACTUATED VALVE, THE CONTRACTOR SHALL PROVIDE AN ASCE/ANSI 25-06 LISTED SEISMIC ACTUATED VALVE JUST AFTER THE UTILITY COMPANY METER.
5. WHERE VICTAULIC SYSTEMS ARE APPROVED ON A PER-PROJECT BASIS, "ROUST-A-BOUT" FITTINGS ARE NOT ALLOWED.
6. ALL EQUIPMENT SHALL BE RATED IN EXCESS OF THE AVAILABLE FAULT CURRENT AT THE POINT OF CONNECTION.
7. WHERE VFDs (VSDs) AND MOTORS ARE PROVIDED BY THE MECHANICAL OR PLUMBING CONTRACTOR: VFD DRIVES SHALL MEET THE FOLLOWING MINIMUM STANDARDS - BUILT-IN BACNET MS/TP COMMUNICATIONS. PROVIDE WITH AN INTEGRAL FUSED DISCONNECT OR 100% RATED AIC CIRCUIT BREAKER. ALLOW FOR A/C POWER FLUCTUATIONS OF - SURGE TO 525V FROM 480V, SAG TO 375V FROM 480V, FREQUENCY DEVIATION FROM 50 TO 65Hz, VOLTAGE SPIKES UP TO 2X NORMAL INCOMING VOLTAGE FOR 1 MILLISECOND, ACCEPT A 2% VOLTAGE IMBALANCE. VFDs TO BE DANFOSS VLT HVAC DRIVE FC102, ABB ACH580, YASKAWA Z1000, MITSUBISHI FR-F800. EXTERIOR DRIVES RATED TO 50°C WITHOUT DE-RATING. INTERIOR DRIVES RATED TO 40°C WITHOUT DE-RATING. DRIVES MUST HAVE A dv/dt OUTPUT FILTER. BI-DIRECTIONAL COASTING MOTOR RESTART CAPABILITY. BROKEN BELT/LOAD ABNORMALITY DETECTION. ENCLOSURES TO BE RATED FOR THE INSTALLED LOCATION.
8. ELECTRIC MOTORS - MOTORS ON VFD SERVICE, TO HAVE A SHAFT GROUNDING DEVICE, OVER 100 HP TO HAVE A SHAFT GROUNDING DEVICE AND AN INSULATED BEARING ON THE NON-DRIVEN END OF THE MOTOR. (OPPOSITE END OF THE MOTOR RELATIVE TO WHERE THE SHAFT GROUNDING DEVICE IS LOCATED.) MOTORS TO COMPLY WITH NEMA MG-1. MOTORS TO BE RATED FOR THE INSTALLED LOCATION.
9. PUMPS: EFFECTIVE 1 JANUARY 2020, EQUIPMENT REGULATED BY THE DEPARTMENT OF ENERGY PUMP STANDARDS SHALL BE TESTED USING THE PER$_{CL}$ METHOD. PUMPS BEARING ONLY THE PEI$_{VL}$ INDEX ARE NOT APPROVED. SUBMITTALS MUST NOTE THE PUMP EFFICIENCY INDEX AND THE DOE MINIMUM STANDARD.

PART THREE - EXECUTION

10. THE CONTRACTOR SHALL PROVIDE ALL SLEEVES, OPENINGS, CUTTING AND PATCHING NECESSARY FOR THE INSTALLATION OF THE WORK. CUTTING AND PATCHING SHALL BE DONE BY WORKMEN SKILLED IN THE TRADES REQUIRED AND PAID BY THE CONTRACTOR REQUIRING THE WORK COMPLETED. SYSTEMS PASSING THROUGH WATER PROOFING OR DAMP PROOFING SHALL BE WATER TIGHT. SYSTEMS PASSING THROUGH FIRE RATED CONSTRUCTION SHALL BE FIRE PROOFED WITHER MATERIAL APPROVED FOR THE FIRE AND TEMPERATURE RATING OF THE ASSEMBLY AND U.L. LISTED. (IF THE ARCHITECT HAS NOT PROVIDED A STANDARD DRAWING/ASSEMBLY FOR AN APPLICATION AND ONE IS NOT AVALIABLE, THE CONTRACTOR IS RESPONSIBLE TO OBTAIN AN "ENGINEERING JUDGEMENT" AND ASSOCIATED DRAWING FOR THE APPLICATION.)
11. EQUIPMENT LOCATED ON A ROOF WHERE NO PARAPET OR GUARD RAIL, 42" HIGH OR GREATER, EXISTS, MUST BE INSTALLED A MINIMUM OF 10 FEET FROM THE ROOF EDGE. IF NOT POSSIBLE A STATIC LINE ANCHOR POINT PER ANSI/ASSE STANDARDS IS TO BE PROVIDED
12. THE CONTRACTOR SHALL PROVIDE ALL RIGGING, HANDLING OF MATERIALS AND EQUIPMENT, AND THE NECESSARY PROTECTION FOR MATERIALS AND EQUIPMENT.
13. THE CONTRACTOR WILL PROTECT THE WORK AND MATERIAL AGAINST DIRT, THEFT, INJURY OR DAMAGE UNTIL ACCEPTED BY OWNER. ALL WORK SHALL BE TURNED OVER TO OWNER CLEAN AND IN NEW CONDITION.
14. WHERE PIPES ARE INSTALLED THAT PASS THROUGH FLOORS THAT ARE NOT SLAB-ON-GRADE AND THE FLOOR IS A FIRE RATED ASSEMBLY, PER CODE, THE OPENING CREATED TO ACCEPT THE PIPING ASSEMBLY THROUGH THE FLOOR MUST USE A LISTED SYSTEM TO BE TEMPERATURE AND FIRE RATED TO MATCH THE RATING OF THE FLOOR (MIN 2 HOUR).
15. EQUIPMENT CONDENSATE DRAINS: FAN COIL, AHU AND OTHER SIMILAR EQUIPMENT CONDENSATE DRAINS MAY OR MAY NOT BE DOCUMENTED ON THE PROJECT DRAWINGS. IT IS THE RESPONSIBILITY OF THE CONTRACTOR TO PROVIDE CONDENSATE DRAINS TO AN APPROVED RECEPTOR, SIZE DRAIN TO MATCH OR EXCEED CODE MINIMUMS. PROVIDE A CONDENSATE PUMP WHERE REQUIRED (IE: LITTLE GIANT NXTGEN)
16. EACH CONTRACTOR SHALL PROVIDE ALL FOUNDATIONS, HANGERS, AND SUPPORTS FOR ALL EQUIPMENT SUPPLIED AND/OR INSTALLED UNDER THEIR WORK. ANY EQUIPMENT WITH MOVING PARTS SHALL BE PROVIDED WITH VIBRATION ISOLATION AND FLEXIBLE CONNECTIONS TO PIPING AND OR DUCTWORK IF APPLICABLE. MISCELLANEOUS STEEL AND ANCHORS REQUIRED FOR THE INSTALLATION OF THE CONTRACTORS EQUIPMENT IS THE RESPONSIBILITY OF THE CONTRACTOR AND THE RETENTION OF A STRUCTURAL ENGINEER OR OTHER DESIGN DISCIPLINE TO COMPLETE THE WORK IS THE RESPONSIBILITY OF THE CONTRACTOR. EG: THE USE OF CONCRETE ANCHORS WILL REQUIRE DOCUMENTATION APPROVAL FROM A STRUCTURAL ENGINEER RETAINED BY THE CONTRACTOR.
17. WHERE PIPES OR CONDUITS PASS THROUGH WALLS, FLOORS, OR CEILINGS IN FINISHED AREAS, THEY SHALL BE FURNISHED WITH ESCUTCHEON PLATES (COLOR PER ARCHITECT AND/OR INTERIOR DESIGNER).
18. PIPES AND/OR CONDUITS PASSING THROUGH WALL, FLOORS AND PARTITIONS SHALL BE PROVIDED WITH SLEEVES. SLEEVES PASSING THROUGH WATER PROOFING OR DAMP PROOFING SHALL BE WATER TIGHT. SLEEVES/PIPES PASSING THROUGH FIRE RATED CONSTRUCTION SHALL BE FIRE PROOFED WITH MATERIAL APPROVED FOR THE FIRE AND TEMPERATURE RATING OF THE ASSEMBLY AND U.L. LISTED. (IF THE ARCHITECT HAS NOT PROVIDED A STANDARD DRAWING/ASSEMBLY FOR AN APPLICATION AND ONE IS NOT AVAILABLE, THE CONTRACTOR IS RESPONSIBLE TO OBTAIN AN "ENGINEERING JUDGEMENT" AND ASSOCIATED DRAWING FOR THE APPLICATION.)
19. AT THE CONCLUSION OF THE JOB, EACH PIECE OF EQUIPMENT, VALVE, SWITCH, STARTER, PANEL, PIPE LINE, CONDUIT, DUCT, ETC., SHALL BE CLEARLY IDENTIFIED WHETHER EXPOSED OR CONCEALED, COVERED OR UNCOVERED, IN ACCORDANCE WITH OSHA AND ANSI REGULATIONS. IDENTIFY PIPES NEAR EACH VALVE WITH "BRANDY-PERMA' CODE PIPE TAPE" OR T. & B. WESTLINE "TEL-A-PIPE" INDICATING DIRECTION OF FLOW, SERVICE, ZONE, AND SIZE. TAPE SHALL BE APPLIED TO PIPE, CONDUIT, OR COVERING. VALVES, CONTROLS, AND DAMPERS SHALL BE IDENTIFIED BY 2-INCH LACQUERED BRASS TAGS WITH STAMPED LETTERS FASTENED WITH "S" HOOKS OR CHAINS. EQUIPMENT IS TO BE IDENTIFIED AS TO FUNCTION AND PURPOSE BY MEANS OF PERMANENTLY ATTACHED LAMINATED ENGRAVED PHENOLIC NAMEPLATES WITH BEVELED EDGES, AND WHITE LETTERS ON BLACK BACKGROUND. (NO ADHESIVE LABELS ALLOWED).
20. AT THE CONCLUSION OF THE WORK, ALL EQUIPMENT AND SYSTEMS SHALL BE BALANCED, ADJUSTED, AND TESTED TO PROVIDE A QUIET-OPERATING, STABLE, AND SAFELY OPERATING SYSTEM(S). DEMONSTRATE OPERATION OF ALL SYSTEMS TO THE OWNER'S DESIGNATED REPRESENTATIVE. THE TEST AND BALANCE WORK SHALL BE PERFORMED IN ACCORDANCE WITH NEBB OR AABC STANDARDS, BY INDEPENDENT, APPROVED, AND CERTIFIED TEST AND BALANCE PERSONNEL. THE TEST AND BALANCE SUBCONTRACTOR IS TO PROVIDE INSTRUMENT TEST PORT COVERS AT ALL TEST LOCATIONS ON OUTDOOR AIR HANDLING UNITS AND AT ALL OTHER OUTDOOR AIR HANDLING EQUIPMENT. TEST PORT COVERS SHALL BE VENTLOK MODEL #699, OR APPROVED EQUAL.
21. IN LOCATIONS WHERE SEISMIC DESIGN REQUIREMENTS EXIST, THE MECHANICAL/PLUMBING CONTRACTOR IS RESPONSIBLE FOR RETAINING AND PAYING FOR THE DESIGN SERVICES OF A STRUCTURAL ENGINEER TO CREATE THE DESIGN AND INSTALLATION DRAWINGS FOR MECHANICAL/PLUMBING SYSTEMS SEISMIC RESTRAINT SUPPORT, PER THE PROJECT BUILDING CODE. PRIOR TO CONSTRUCTION, THE CONTRACTOR SHALL SUBMIT MECHANICAL SYSTEMS SHOP DRAWINGS BASED UPON MULTI DISCIPLINE COORDINATION. INCLUDED WITH THE SHOP DRAWING SUBMISSION SHALL BE SEISMIC RESTRAINT DRAWINGS NOTING WHERE SEISMIC SUPPORT IS REQUIRED. FOR EACH AREA NOTED NEEDING SEISMIC SUPPORT FOR THE MECHANICAL SYSTEMS, THERE SHALL BE A SEISMIC DRAWING DETAILING THE REQUIRED SUPPORT. THE SEISMIC SUPPORT DRAWINGS SHALL BE SIGNED AND SEALED BY A REGISTERED STRUCTURAL ENGINEER IN THE SAME STATE AS THE PROJECT. IN ADDITION TO THE PROJECT DESIGN TEAM REVIEW, THE SEISMIC SUPPORT DRAWINGS WILL BE ISSUED TO THE LOCAL BUILDING DEPARTMENT FOR REVIEW AS PART OF A DEFERRED SUBMITTAL FOR THE BUILDING DOCUMENTS. COMMENCEMENT OF CONSTRUCTION PRIOR TO BUILDING DEPARTMENT REVIEW IS AT THE CONTRACTOR'S RISK.
22. CONTRACTOR SHALL REFER TO THE ARCHITECTURAL REFLECTED CEILING PLAN FOR EXACT LOCATION OF GRILLES, REGISTERS AND DIFFUSERS.
23. PIPE HANGERS: PIPE SIZES 1/2" TO 1 1/2" - 5'-0" MAX SPACING, 3/8" MIN. ROD DIAMETER; PIPE SIZES 2" TO 3" - 8'-0" MAX SPACING, 1/2" MIN. ROD DIAMETER; PIPE SIZES 4 TO 6"-10'-0" MAX SPACING, 5/8" MIN. ROD DIAMETER.
24. WATER PROOFING AND FLASHING OF PIPE PENETRATIONS THROUGH THE EXTERIOR WALL AND ROOF SHALL BE THE RESPONSIBILITY OF THE INSTALLING MECHANICAL/PLUMBING CONTRACTOR. THE CONTRACTOR SHALL COORDINATE LOCATIONS, MEANS AND METHODS WITH GENERAL CONTRACTOR/OWNER FOR THE VARIOUS BUILDING SYSTEMS. ROOFING MEMBRANE PENETRATIONS MUST BE PERFORMED BY A CONTRACTOR THAT IS WARRANTY APPROVED FOR THE SPECIFIC ROOFING SYSTEM.
25. CONTRACTOR SHALL OBTAIN FROM THE ARCHITECT THE EXACT LOCATION OF EQUIPMENT AND ANY OTHER APPARATUS SPECIFIED IN THESE DRAWINGS.
26. INSTALL CONDENSATE PIPING, WITH P-TRAP, FULL SIZE FROM EQUIPMENT TO FLOOR SINK, MOP SINK OR TAILPIECE (3/4" MAXIMUM CONDENSATE DRAIN LINE SIZE FOR TAILPIECE).
27. PROVIDE PRESSURE REDUCING VALVES IN HYDRONIC SYSTEMS AS REQUIRED.

DUSTIN T. HART
Exp: 6/30/2023
MECHANICAL
No. 24362
JUN 16 2023

IZ design studio
design . . . sustainability . . . architecture.
tel. 702.441.0026
fax. 702.475.4755
www.izdesignstudio.com
7229 W. Sahara Ave Suite 120
Las Vegas, NV 89117
Nevada

Sheet Name
SPECIFICATIONS

Project Name
SNHD
SNHD BEHAVIORAL HEALTH 2
278 S. DECATUR BLVD
LAS VEGAS, NV 89107

DELTA NO.	REVISION NO.	DESCRIPTION	DATE

Project Number	21479
Date	06.16.2023
Drawn By	IMEG
Checked By	PE

IMEG
370 E. WINDMILL LANE
SUITE 100, LAS VEGAS, NV
89123
PH: 702.896.1100
www.imegcorp.com
IMEG #23002690.00

M001

AIR DISTRIBUTION SCHEDULE

MARK	MANUFACTURER MODEL	AIRFLOW RANGE	SERVICE TYPE	MAX NC	NECK SIZE	PANEL SIZE	REMARKS
D-1 CFM	TITUS MCD	0-100	LAY-IN SUPPLY	25	6"X6"	12"X12"	1, 2
D-2 CFM	TITUS MCD	0-100	LAY-IN SUPPLY	25	6"X6"	24"X24"	1, 2
D-3 CFM	TITUS MCD	101-200	LAY-IN SUPPLY	25	8"X8"	24"X24"	1, 2
D-4 CFM	TITUS MCD	201-375	LAY-IN SUPPLY	25	10"X10"	24"X24"	1, 2
D-5 CFM	TITUS MCD	376-600	LAY-IN SUPPLY	25	12"X12"	24"X24"	1, 2
D-5 CFM	TITUS MCD	601-890	LAY-IN SUPPLY	25	14"X14"	24"X24"	1, 2
R-1 CFM	TITUS 50F	0-2000	LAY-IN RETURN	25	22"X22"	24"X24"	1, 3

1. COORDINATE BORDER, COLOR, FINISH AND EXACT LOCATION WITH ARCHITECT
2. PROVIDE DUCT TRANSITION AS REQUIRED.
3. PROVIDE RA BOOT AS PER DIAGRAM.

TERMINAL BOX SCHEDULE

MARK	MANUFACTURER MODEL	AIR FLOW (CFM)				INLET DIA (IN)	OUTLET SIZE WxH (IN)	AIR PRESSURE DROP (IN WG)	NC RATING @ 1" SP		REHEAT COIL (ELECTRIC)					OPERATING WEIGHT (LBS)	REMARKS
		COOLING MAX	COOLING MIN.	HEATING MAX	HEATING MIN.				DISCHARGE	RADIATED	MBH	KW	EAT (°F)	LAT (°F)	V/PH/HZ		
VAV 1	TITUS DESV	850	145	425	425	10	-	-	31	28	17.1	5	55	90	208/3/60	80	1, 2, 3, 4, 5, 6, 7
VAV 2	TITUS DESV	925	145	500	500	10	-	-	31	28	20.5	6	55	90	208/3/60	80	1, 2, 3, 4, 5, 6, 7
VAV 3	TITUS DESV	850	145	425	425	10	-	-	31	28	17.1	5	55	90	208/3/60	80	1, 2, 3, 4, 5, 6, 7
VAV 4	TITUS DESV	975	145	500	500	10	-	-	31	28	20.5	6	55	90	208/3/60	80	1, 2, 3, 4, 5, 6, 7
VAV 5	TITUS DESV	1400	190	700	700	12	-	-	30	28	27.3	8	55	90	208/3/60	80	1, 2, 3, 4, 5, 6, 7

1. PROVIDE WITH HANGER BRACKETS.
2. CONTROLS AND ACTUATOR BY BAS CONTRACTOR.
3. PROVIDE MINIMUM 3 DUCT DIAMETERS OF STRAIGHT RIGID DUCT ON INLET.
4. DUCT TO INLET: PROVIDE MIN. ONE (EVEN) DUCT SIZE LARGER THAN LISTED INLET. IF OVER 15 FOOT RUN, OR MORE THAN TWO 90° ELBOWS, PROVIDE MIN. TWO DUCT SIZES LARGER.
5. MINIMUM INLET SP: 1"
6. MINIMUM DOWNSTREAM SP: 0.25"
7. CONTRACTOR SHALL PROVIDE A DISCHARGE AIR TEMPERATURE SENSOR AT THE VAV BOX DISCHARGE WITH ALL ASSOCIATED POWER AND CONTROLS FOR INTERFACE WITH THE LANDLORDS BAS SYSTEM CONTRACTOR SHALL UPDATE GRAPHICS WITH POINTS ACCORDINGLY (RE-HEAT SYSTEMS ONLY).

FIRE SPRINKLER NOTES

1. SPRINKLER CONTRACTOR SHALL PROVIDE SYSTEM DESIGN, LABOR, MATERIALS, EQUIPMENT AND SERVICES NECESSARY FOR A COMPLETE DESIGN BUILD FIRE SPRINKLER SYSTEM.
2. THE DESIGN AND INSTALLATION SHALL CONFORM TO ALL REQUIREMENTS OF THE NATIONAL FIRE PROTECTION ASSOCIATION (NFPA 13) AND THE GENERAL REQUIREMENTS OF APPLICABLE SECTIONS OF THE INTERNATIONAL BUILDING CODE, THE SPECIFIC REQUIREMENTS OF THE LOCAL FIRE PREVENTION BUREAU, AND THE OWNER'S INSURANCE UNDERWRITER.
3. THE SYSTEM SHALL INCLUDE, BUT IS NOT LIMITED TO, SPRINKLER HEADS, VALVES, ESCUTCHEONS, PIPING, FITTINGS, HANGERS, DRAINS, WET TEST CONNECTIONS, SIGNS AND OTHER IDENTIFICATION MARKINGS AS REQUIRED.
4. ALL MATERIALS AND EQUIPMENT USED IN THE INSTALLATION OF FIRE PROTECTION SYSTEMS SHALL BE LISTED AS APPROVED BY UNDERWRITERS LABORATORIES, INC., "LIST OF INSPECTED FIRE PROTECTION EQUIPMENT AND MATERIALS," OR APPROVED BY OTHER APPROPRIATE, NATIONALLY RECOGNIZED TESTING LABORATORIES FOR USE IN SPRINKLER SYSTEMS, AND SHALL BE THE LATEST DESIGN OF THE MANUFACTURER.
5. SPRINKLER HEADS SHALL BE PROVIDED AS REQUIRED AND CONFORM TO THE LATEST EDITION OF NFPA 13.
6. PIPING, PIPE HANGERS AND SUPPORTS SHALL CONFORM TO THE LATEST EDITION OF NFPA 13.
7. INSTALL HEADS AT FINISHED HEIGHT WITH ESCUTCHEON, OR DIRECTLY IN REDUCER OF EXTRA LENGTH DROPS RATHER THAN PLUGGING. IF EXTRA LENGTH DROPS ARE INSTALLED, CUT BACK HEADS AFTER CEILING INSTALLATION IN THE CUSTOMARY MANNER.
8. SPRINKLER DROPS ARE TO BE INSTALLED PRIOR TO INSTALLATION OF CEILING SYSTEM THEN REMOVED AND REINSTALLED AFTER INSTALLATION OF CEILING SYSTEM, WITH DROPS MODIFIED, AS REQUIRED. PROVIDE ESCUTCHEONS AT EACH SPRINKLER HEAD.
9. COORDINATE WITH OTHER WORK, INCLUDING DUCTWORK, DIFFUSERS, GRILLES, ELECTRICAL AND PLUMBING PIPING, AS NECESSARY TO INTERFACE COMPONENTS OF FIRE SPRINKLER PIPING PROPERLY WITH OTHER WORK.
10. AFTER SYSTEM IS COMPLETELY INSTALLED, IT SHALL BE FILLED AND TESTED IN ACCORDANCE WITH LOCAL REQUIREMENTS, AND THE REQUIREMENTS OF THE APPLICABLE NFPA BULLETINS.
11. FINAL SHOP DRAWINGS SHALL FIRST BE SUBMITTED TO THE STATE FIRE MARSHAL. FOLLOWING THEIR REVIEW AND APPROVAL, SUBMIT TO THE OWNER'S INSURANCE COMPANY. FOLLOWING THEIR SIGNATURED APPROVAL, THE SHOP DRAWINGS SHALL BE SENT TO THE ARCHITECT FOR CEILING DESIGN COORDINATION ONLY. IF REQUIRED BY ANY REVIEWING AGENT, OR IF REVIEW COMMENTS REQUIRE EXTENSIVE REVISIONS, THE SUBMITTAL SHALL BE REVISED AS REQUIRED AND RESUBMITTED FOR APPROVAL BEFORE SUBMISSION TO THE ARCHITECTS OFFICE.
12. THE CONTRACTOR GUARANTEES THAT ALL WORK INSTALLED SHALL BE FREE OF ALL DEFECTS IN WORKMANSHIP AND MATERIAL FOR A PERIOD OF ONE YEAR FROM THE DATE OF THE CERTIFICATION OF COMPLETION AND ACCEPTANCE OF THE WORK.
13. ADDITIONAL SPRINKLER HEADS SHALL BE PROVIDED AS REQUIRED AND CONFORM TO THE LATEST EDITION OF NFPA 13.
14. ADDITIONAL PIPING, PIPE HANGERS AND SUPPORTS SHALL CONFORM TO THE LATEST EDITION OF NFPA 13.
15. ACTIVATE THE SPRINKLER SYSTEM FOR PROTECTION PURPOSES AS SOON AS DROPS HAVE BEEN COMPLETE IN ANY ONE SECTION OF THE SPRINKLER.
16. ALL SPRINKLER HEADS AND ESCUTCHEONS SHALL HAVE MOUNTING TYPE (FLUSH OR SEMI-RECESSED), FINISH AND COLOR AS SELECTED BY ARCHITECT.
17. ALL SPRINKLERS SHALL BE CENTERED WITHIN THE CEILING GRID, COORDINATE EXACT LOCATION WITH ARCHITECT PRIOR TO SUBMITTAL OF DRAWINGS TO FIRE DEPARTMENT.

VENTILATION CALCULATIONS

Ventilation Sizing Summary for (E) RTU-17

Project Name: 2300260_SNHD Behavioral Clinic — 05/20/2023
Prepared by: IMEG Corp — 09:58AM

1. Summary

Ventilation Sizing Method	**ASHRAE Std 62.1-2016**	
Design Condition	**Minimum flow (cooling)**	
Occupant Diversity (D)	**1.000**	
Uncorrected Outdoor Air Intake (Vou)	**453**	CFM
System Ventilation Efficiency (Ev)	**1.000**	
Outdoor Air Intake (Vot)	**453**	CFM

2. Space Ventilation Analysis

Zone Name / Space Name	Mult.	Minimum Supply Air (CFM) (Vpz)	Space Floor Area (ft²) (Az)	Area Outdoor Air Rate (CFM/ft²) (Ra)	Time Averaged Occupancy (Occupants) (Pz)	People Outdoor Air Rate (CFM/person) (Rp)	Air Distribution Effectiveness (Ez)	Space Outdoor Air (CFM) (Voz)	Breathing Zone Outdoor Air (CFM) (Vbz)	Space Ventilation Efficiency (Evz)
VAV-1										
100 MANAGER	1	23	137.0	0.06	3.0	5.00	1.0	**23**	*23*	1.000
100 VESTIBULE	1	2	30.0	0.06	0.0	0.00	1.0	**2**	*2*	1.000
101 STORAGE	1	5	81.0	0.06	0.0	5.00	1.0	**5**	*5*	1.000
111 RECEPTION	1	15	79.0	0.06	2.0	5.00	1.0	**15**	*15*	1.000
VAV-2										
109 TREATMENT#4	1	23	128.0	0.06	3.0	5.00	1.0	**23**	*23*	1.000
110 MA	1	29	318.0	0.06	2.0	5.00	1.0	**29**	*29*	1.000
VAV-3										
102 GROUP ROOM #1	1	116	269.0	0.06	20.0	5.00	1.0	**116**	*116*	1.000
VAV-4										
103 TREATMENT#1	1	23	127.0	0.06	3.0	5.00	1.0	**23**	*23*	1.000
104 TREATMENT#2	1	23	128.0	0.06	3.0	5.00	1.0	**23**	*23*	1.000
105 TREATMENT#3	1	23	128.0	0.06	3.0	5.00	1.0	**23**	*23*	1.000
VAV-5										
106 WAITING ROOM	1	173	376.0	0.06	30.0	5.00	1.0	**173**	*173*	1.000
Totals (incl. Space Multipliers)		**453**							**453**	**1.000**

IMEG
370 E. WINDMILL LANE
SUITE 100, LAS VEGAS, NV
89123
PH: 702.896.1100
www.imegcorp.com
IMEG #23002690.00

PROFESSIONAL ENGINEER - STATE OF NEVADA
DUSTIN T. HART
Exp. 6/30/2023
MECHANICAL
NO. 24362
JUN 16 2023

IZ design studio
design...sustainability...architecture.
7229 W. Sahara Ave Suite 100
Las Vegas, NV 89117 Nevada
tel. 702.441.0026
Fax. 702.475.4755
www.izdesignstudio.com

SCHEDULES
SNHD
SNHD BEHAVIORAL HEALTH 2
278 S. DECATUR BLVD
LAS VEGAS, NV 89107

DELTA NO.	REVISION NO.	DESCRIPTION	DATE

Sheet Name
Project Name

Project Number	21479
Date	06.16.2023
Drawn By	IMEG
Checked By	PE

M002

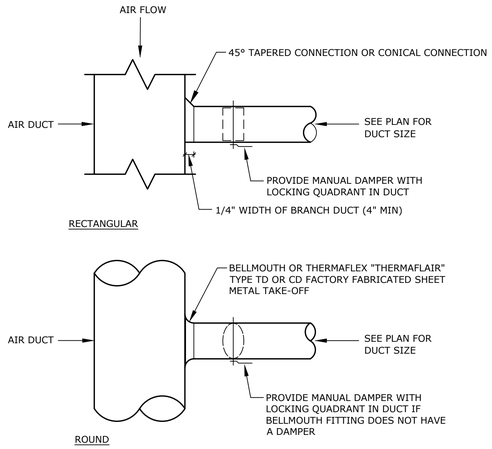

A M003 TYPICAL BRANCH DUCT TAKE-OFF

NTS

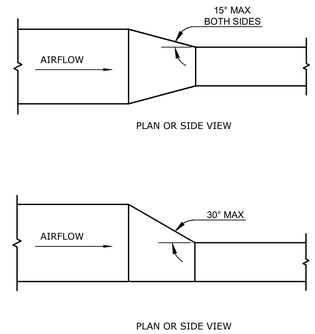

B M003 DUCT TRANSITION

NTS

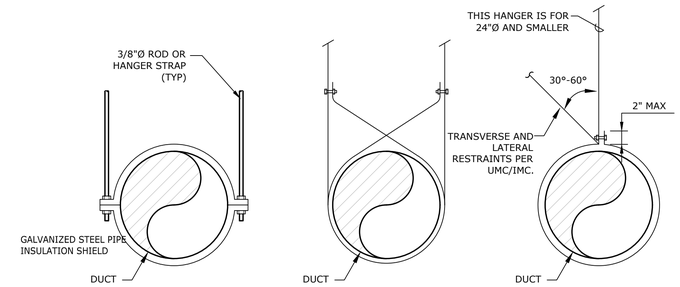

NOTES:

1. ON DUCTS OVER 48" WIDE, BOTTOM SHALL BE BRACE BY ANGLE. FOR CROSS SECTION AREA MORE THAN 8 SQUARE FEET, DUCT SHALL BE BRACED BY ANGLES ON ALL FOUR SIDES.
2. SUPPORTS SHALL BE SPACED AND SIZED AS PER SMACNA STANDARDS.
3. PROVIDE SWAY & SEISMIC BRACING FOR TWICE THE CURRENT IBC EARTHQUAKE ZONE FOR REQUIREMENTS.

C M003 DUCT HANGER SUPPORT

NTS

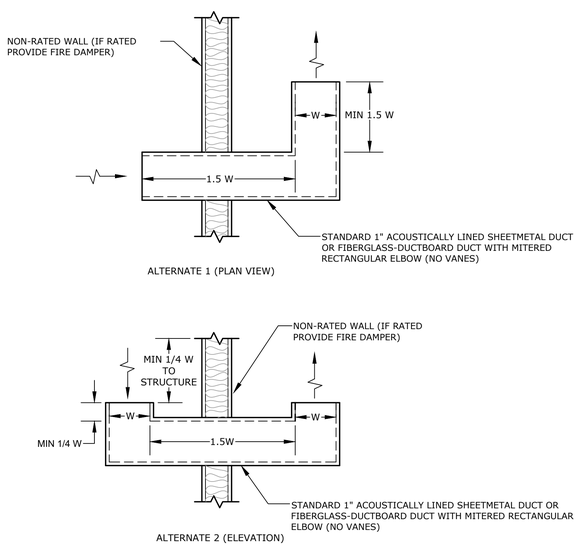

NOTES:

1. SEE PLANS FOR SIZE AND LOCATION OF AIR TRANSFER DUCT.

D M003 TRANSFER DUCT

NTS

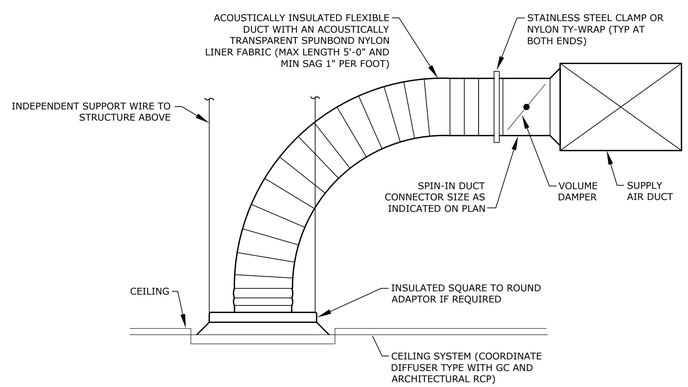

NOTES:

1. USE WORM DRIVE CLAMPS OR DRAW BANDS FOR CONNECTING FLEXIBLE AIR DUCT TO DIFFUSER AND BRANCH DUCT. SPLICES IN FLEXIBLE AIR DUCT SHALL NOT BE ALLOWED.

E M003 CEILING DIFFUSER WITH FLEX DUCT

NTS

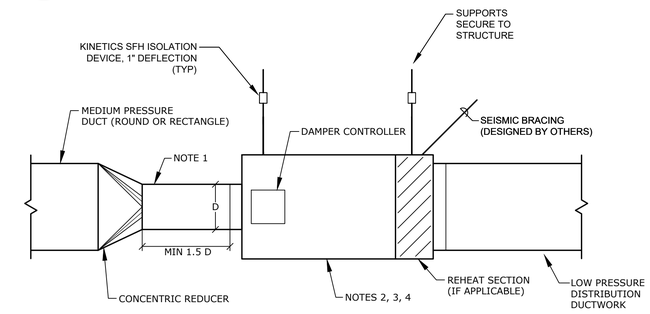

NOTES:

1. DUCT INTAKE SHALL BE MINIMUM OF 1.5 D. IF FLEX DUCT CONNECTION IS USED, DUCT CONNECTION SHALL NOT SAG MORE THAN 1/2" OVER THE 1.5 D RUN. IF STRAIGHT RUN CAN NOT BE MAINTAINED, PROVIDE FLOW STRAIGHTENER AT BOX INLET.
2. PROVIDE HANGER SUPPORTS AS REQUIRED.
3. PROVIDE MINIMUM 36" CLEARANCE FOR ACCESS TO CONTROL PANEL.
4. INSTALL UNIT PER MANUFACTURERS RECOMMENDATIONS.

F M003 TERMINAL BOX

NTS

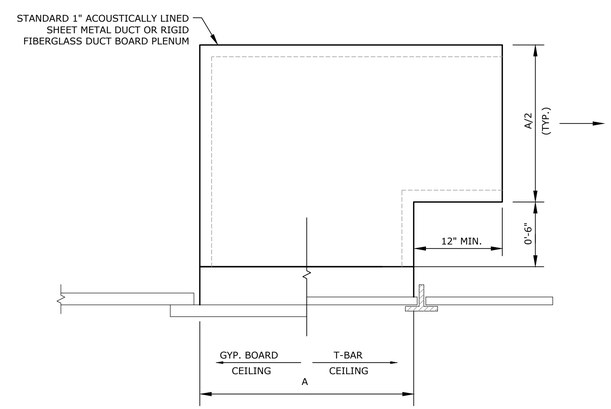

G M003 RETURN AIR GRILLE

NTS

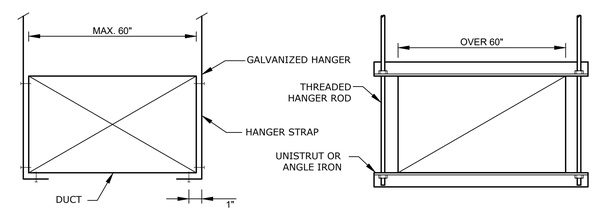

NOTES:

1. ON DUCTS OVER 48" WIDE, BOTTOM SHALL BE BRACE BY ANGLE. FOR CROSS SECTION AREA MORE THAN 8 SQUARE FEET, DUCT SHALL BE BRACED BY ANGLES ON ALL FOUR SIDES.
2. SUPPORTS SHALL BE SPACED AND SIZED AS PER SMACNA STANDARDS.

H M003 DUCT HANGER SUPPORT

NTS

IMEG
370 E. WINDMILL LANE
SUITE 100, LAS VEGAS, NV
89123
PH: 702.896.1100
www.imegcorp.com
IMEG #23002690.00

JUN 16 2023

IZ design studio
design...sustainability...architecture.
tel. 702.441.0026
Fax. 702.475.4755
www.izdesignstudio.com
7229 W. Sahara Ave Suite 170
Las Vegas, NV 89117
Nevada

DIAGRAMS

SNHD BEHAVIORAL HEALTH 2

278 S. DECATUR BLVD
LAS VEGAS, NV 89107

DELTA NO.	REVISION NO.	DESCRIPTION	DATE

Sheet Name

Project Name

Project Number	21479
Date	06.16.2023
Drawn By	IMEG
Checked By	PE

M003

DEMOLITION NOTES:

1. EQUIPMENT AND PIPING LOCATIONS SHOWN FROM BEST AVAILABLE INFORMATION. CONTRACTOR SHALL FIELD VERIFY SIZES AND LOCATIONS.
2. EQUIPMENT THAT IS BEING REMOVED SHALL BECOME THE PROPERTY OF THE CONTRACTOR AND SHALL BE REMOVED FROM THE JOB SITE, EXCEPT EQUIPMENT SELECTED BY OWNER. OWNER SELECTED EQUIPMENT WILL BE TAGGED AND SHALL BE MOVED BY CONTRACTOR TO OWNER'S STORAGE ON SITE.
3. WHERE PIPING OR DUCTWORK IS TO BE CUT OFF AT A POINT, IT SHALL BE CAPPED OR BLANKED OFF AT THAT POINT. INSULATION ON REMAINING PIPE OR DUCT TO BE REPAIRED TO NEW CONDITION.
4. PIPING CONNECTED TO EQUIPMENT THAT IS BEING REMOVED SHALL BE CUT AND CAPPED IN WALLS, FLOORS OR CEILING SO AS NOT TO INTERFERE WITH NEW CONSTRUCTION OR EQUIPMENT.

SHEET NOTES:

1. REMOVE ALL PLUMBING FIXTURES AND ASSOCIATED APPURTENANCES WITHIN AREA OF WORK. REMOVE SANITARY AND/OR GREASE WASTE PIPING BACK TO BELOW GRADE AND CAP/ABANDON IN PLACE. REMOVE VENT PIPING BACK TO NEAREST MAIN AND CAP/ABANDON ABOVE CEILING. REMOVE DOMESTIC HOT WATER, COLD WATER, AND HOT WATER RETURN PIPING AND ASSOCIATED APPURTENANCES BACK TO NEAREST MAINS AND VALVE/CAP/ABANDON ABOVE CEILING. REMOVE WALK-IN COOLER(S) AND ASSOCIATED CONDENSATE LINES. FIELD VERIFY EXACT REQUIREMENTS PRIOR TO COMMENCING WORK.
2. REMOVE EXISTING DIFFUSERS/REGISTER/GRILLE AND ASSOCIATED BRANCH DUCTS BACK TO NEAREST MAINS. EXISTING DUCT MAINS SHALL REMAIN IN PLACE FOR CONNECTION TO NEW DIFFUSERS. FIELD VERIFY EXACT REQUIREMENTS PRIOR TO COMMENCING WORK.
3. REMOVE EXISTING EXHAUST HOOD AND ASSOCIATED APPURTENANCES. REMOVE DUCTWORK BACK TO ROOF MOUNTED EXHAUST FAN. REMOVE ASSOCIATED ROOF MOUNTED FAN AND APPURTENANCES. PATCH ROOF TO MATCH EXISTING. FIELD VERIFY EXACT LOCATION AND REQUIREMENTS PRIOR TO COMMENCING WORK.
4. EXISTING DIFFUSER AND ASSOCIATED APPURTENANCE TO REMAIN. CLEAN/REPAIR/REFURBISH TO LIKE-NEW CONDITION. FIELD VERIFY EXACT LOCATION AND REQUIREMENTS PRIOR TO COMMENCING WORK.
5. REMOVE EXISTING VAV BOX AND ASSOCIATED APPURTENANCES. FIELD VERIFY EXACT LOCATION AND REQUIREMENTS PRIOR TO COMMENCING WORK.
6. RELOCATE EXISTING THERMOSTAT PER NEW WORK PLAN. MODIFY WIRING/CONDUIT AS REQUIRED TO SUIT NEW LOCATION.
7. REMOVE EXISTING 2" CW AND 1" HW BACK TO POINT OF DISCONNECTION AS INDICATED AND CAP IN CEILING. FIELD VERIFY EXACT LOCATION AND SIZE PRIOR TO COMMENCING WORK.
8. PROVIDE NEW ISOLATION VALVES. FIELD VERIFY EXACT LOCATION, SIZE, AND REQUIREMENTS PRIOR TO COMMENCING WORK.

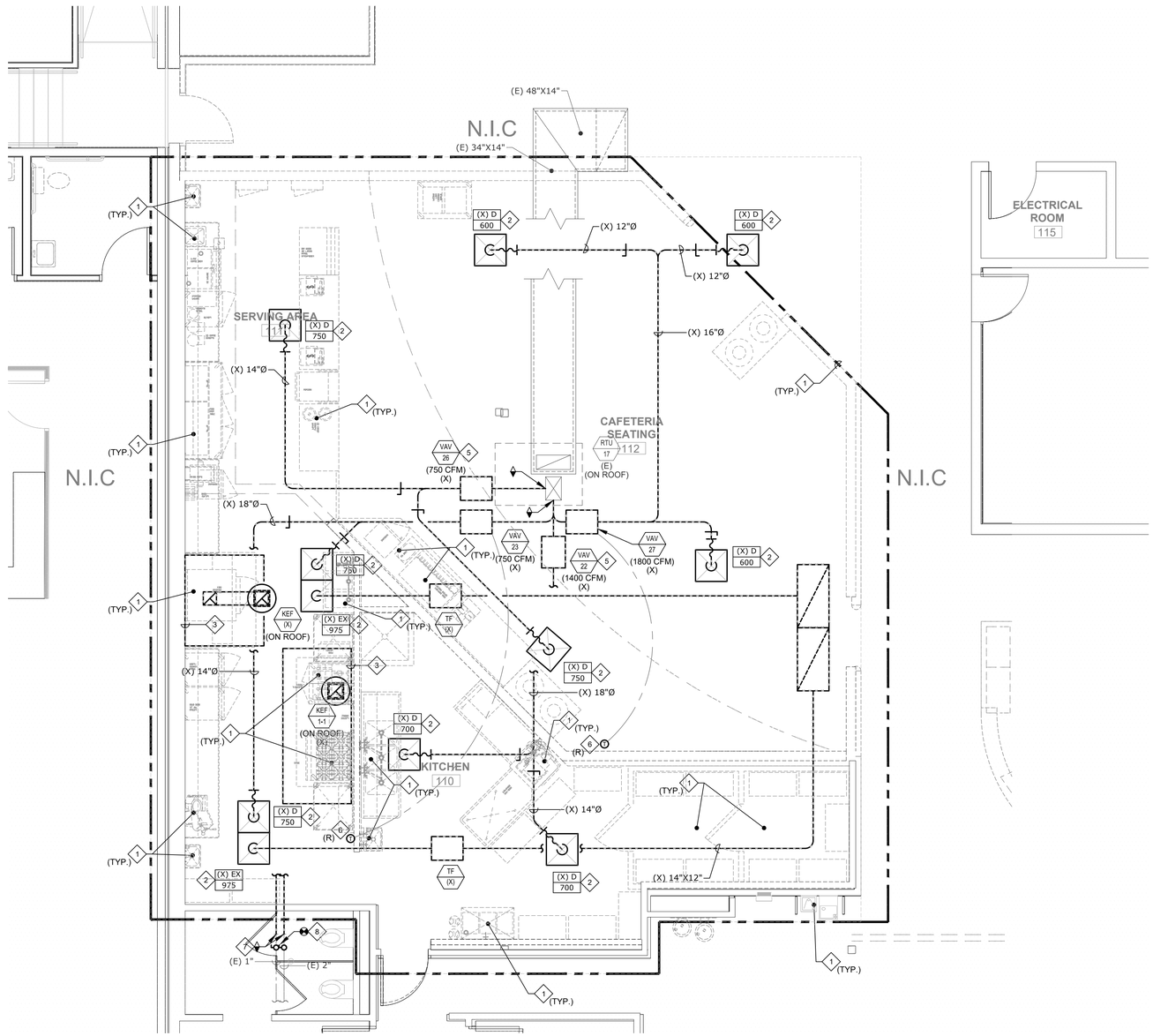

A
MD100
DEMOLITION MECHANICAL PLAN
1/4" = 1'-0"

0' 1' 2' 4' 8'
NORTH

IMEG
370 E. WINDMILL LANE
SUITE 100, LAS VEGAS, NV
89123
PH: 702.896.1100
www.imegcorp.com
IMEG #23002690.00

PROFESSIONAL ENGINEER - STATE OF NEVADA
DUSTIN T. HART
Exp. 6/30/2023
MECHANICAL
NO. 24362

JUN 16 2023

IZ design studio
design...sustainability...architecture.
tel. 702.441.0026
Fax. 702.475.4755
www.izdesignstudio.com
7229 W. Sahara Ave Suite 100
Las Vegas, NV 89117
Nevada

DEMOLITION MECHANICAL PLAN
SNHD
SNHD BEHAVIORAL HEALTH 2
278 S. DECATUR BLVD
LAS VEGAS, NV 89107

DELTA NO.	REVISION NO.	DESCRIPTION	DATE

Sheet Name
Project Name

Project Number	21479
Date	06.16.2023
Drawn By	IMEG
Checked By	PE

MD100

N.I.C

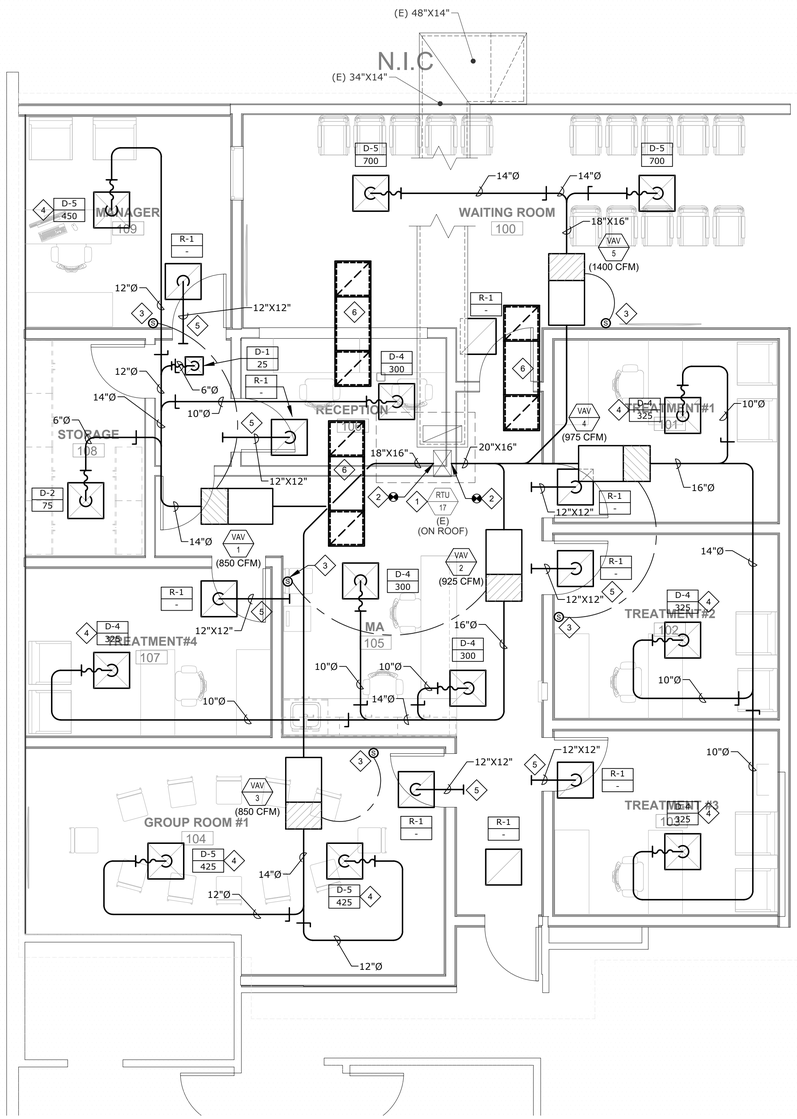

N.I.C

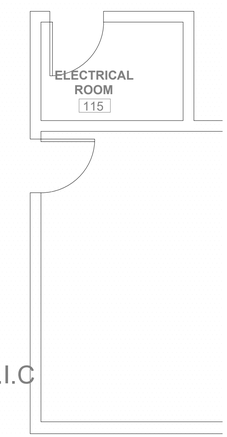

N.I.C

GENERAL NOTES:

1. ACCESS DOORS ARE REQUIRED FOR ALL DAMPERS INSTALLED ABOVE INACCESSIBLE CEILINGS. COORDINATE EXACT LOCATION OF ALL ACCESS DOORS WITH ARCHITECT PRIOR TO INSTALLATION.
2. VERIFY LOCATION OF ALL THERMOSTATS WITH ARCHITECT PRIOR TO INSTALLATION. MOUNT ALL THERMOSTATS @48" A.F.F. IN ACCORDANCE WITH ADA STANDARDS. PROVIDE LOCKING COVERS FOR T-STATS.
3. VERIFY AND COORDINATE FRAME AND BORDER TYPE REQUIREMENTS FOR AIR DEVICES WITH ARCHITECTURAL CEILING PLANS PRIOR TO ORDERING.
4. DUCT SIZES SHOWN ARE THE CLEAR INSIDE DIMENSIONS.
5. THE MECHANICAL CONTRACTOR SHALL VERIFY THE LOCATION OF ALL ROOF MOUNTED EQUIPMENT AND ROOF PENETRATIONS WITH ARCHITECT AND STRUCTURAL ENGINEER PRIOR TO COMMENCING WORK.
6. THE MECHANICAL CONTRACTOR SHALL COORDINATE LOCATION AND ROUTING OF HVAC EQUIPMENT AND DUCTWORK WITH OTHER TRADES PRIOR TO COMMENCING WORK.
7. ALL EXHAUST OUTLETS SHALL BE LOCATED MIN. OF 10'-0'' FROM ANY OUTSIDE AIR INTAKES.
8. THE CUTTING, NOTCHING AND BORING OF HOLES IN FLOOR JOIST AND WALL STUDS SHALL BE IN ACCORDANCE WITH THE LATEST APPROVED EDITION OF THE INTERNATIONAL BUILDING CODE.
9. CONTRACTOR SHALL BE RESPONSIBLE FOR ALL CUTTING AND PATCHING AS REQUIRED TO ACCOMMODATE HIS WORK.
10. REFER TO THE MECHANICAL DIAGRAMS THAT APPLY TO THE WORK ON THIS DRAWING. THESE DIAGRAMS PROVIDE GUIDANCE AS TO INSTALLATION INTENT AND DO NOT NECESSARILY SHOW ALL COMPONENTS REQUIRED.

SHEET NOTES:

1. EXISTING ROOFTOP UNIT TO REMAIN. PROVIDE MAINTENANCE AS REQUIRED TO BRING UNIT UP TO GOOD WORKING CONDITION. FIELD VERIFY EXACT LOCATION AND REQUIREMENTS PRIOR TO COMMENCING WORK.
2. CONNECT NEW SUPPLY DUCT TO EXISTING DUCT STUB INDICATED. PROVIDE DUCT TRANSITION AS REQUIRED. FIELD VERIFY EXACT SIZE AND LOCATION PRIOR TO COMMENCING WORK.
3. PROVIDE TEMPERATURE SENSOR AND WIRING/CONDUIT UP TO NEW VAV BOX AS INDICATED. TIE BACK TO EXISTING RTU/BAS. MATCH BUILDING STANDARDS.
4. DUCTWORK ROUTING SHOWN AS "RUN-AROUND" IS INTENTIONAL FOR NOISE ATTENUATION.
5. EXTEND RETURN DUCT FROM GRILLE, THROUGH FULL-HEIGHT WALL. PROVIDE WITH MINIMUM 1 MITERED ELBOW AND 1" ACOUSTICAL LINING.
6. 24"X24" TRANSFER DUCT FOR RETURN AIR PATH. REFER TO DIAGRAM FOR ADDITIONAL INFORMATION AND REQUIREMENTS.

A
M100
MECHANICAL PLAN
1/4" = 1'-0"

0' 1' 2' 4' 8'

NORTH

IMEG
370 E. WINDMILL LANE
SUITE 100, LAS VEGAS, NV
89123
PH: 702.896.1100
www.imegcorp.com
IMEG #23002690.00

PROFESSIONAL ENGINEER - STATE OF NEVADA
DUSTIN T. HART
Exp. 6/30/2023
MECHANICAL
NO. 24362

JUN 16 2023

IZ design studio
design...sustainability...architecture.
7229 W. Sahara Ave Suite 100
Las Vegas, NV 89117
Nevada
tel. 702.441.0026
Fax. 702.475.4755
www.izdesignstudio.com

MECHANICAL PLAN

SNHD

SNHD BEHAVIORAL HEALTH 2

278 S. DECATUR BLVD
LAS VEGAS, NV 89107

DELTA NO.	REVISION NO.	DESCRIPTION	DATE

Sheet Name

Project Name

Project Number	21479
Date	06.16.2023
Drawn By	IMEG
Checked By	PE

M100

PLUMBING SYMBOL LIST

NOTE: THIS IS A MASTER SCHEDULE. NOT ALL SYMBOLS CONTAINED HEREIN MAY APPEAR ON THE DRAWINGS.

	ITEM TO BE REMOVED
	POINT OF CONNECTION/DISCONNECTION
#	SHEET NOTE
#	REVISION NUMBER
TAG / UNIT	EQUIPMENT MARK
	ACCESS PANEL
	CLEAN OUT
	WALL CLEAN OUT
	FLOOR CLEAN OUT
	GRADE CLEAN OUT
	FLOOR DRAIN
	FLOOR SINK
	FLOOR SINK W/ GRATE
	ROOF DRAIN
	OVERFLOW ROOF DRAIN
	VENT THRU ROOF
FS	FLOW SWITCH
	GAS REGULATOR
G	GAS METER
M	WATER METER
	WATER HAMMER ARRESTOR
	SHUT-OFF VALVE IN IRRIGATION BOX
	BACKFLOW PREVENTION STATION
	HOSE BIBB
A	COMPRESSED AIR LINES
CD	CONDENSATE DRAIN PIPING
PC	PUMPED CONDENSATE DRAIN PIPING
D	DRAIN PIPING
	COLD WATER PIPING
ICW	INDUSTRIAL COLD WATER PIPING
ISCW	INDUSTRIAL SOFTENED COLD WATER PIPING
SCW	SOFTENED COLD WATER PIPING
F	FIRE PROTECTION PIPING
HPG	HIGH PRESSURE GAS PIPING
G	LOW PRESSURE GAS PIPING
MPG	MEDIUM PRESSURE GAS PIPING
GV	GAS VENT PIPING
	HOT WATER PIPING
140°	140° HOT WATER PIPING
	HOT WATER RETURN PIPING
TW	TEMPERED WATER PIPING
ORD	OVERFLOW ROOF DRAIN PIPING
RD	ROOF DRAIN PIPING
AV	ACID VENT PIPING
AW	ABOVE GROUND ACID WASTE PIPING
AW	UNDERGROUND ACID WASTE PIPING
	VENT PIPING
	ABOVE GROUND WASTE PIPING
	UNDERGROUND WASTE PIPING
GW	ABOVE GROUND GREASE WASTE PIPING
GW	UNDERGROUND GREASE WASTE PIPING
GW	ABOVE GROUND GREASE WASTE PIPING W/HEAT TRACE
GW	UNDERGROUND GREASE WASTE PIPING W/HEAT TRACE
	CIRCUIT SETTER
	2-WAY ELECTRONIC CONTROL VALVE
	3-WAY ELECTRONIC CONTROL VALVE
	2-WAY PNEUMATIC CONTROL VALVE
	3-WAY PNEUMATIC CONTROL VALVE
S	SOLENOID VALVE
	BUTTERFLY VALVE
	PLUG VALVE
	GAS COCK
	BALL VALVE
	CHECK VALVE
	GATE VALVE
	HOSE END DRAIN VALVE
	PRESSURE REDUCING VALVE
	RELIEF VALVE
T P	TEMPERATURE PRESSURE RELIEF VALVE
	THERMOMETER
	PRESSURE GAUGE WITH GAUGE COCK
	MANUAL AIR VENT
	PRESSURE TEMPERATURE PORT
	Y-STRAINER WITH BLOWDOWN
	PIPE GUIDE
	UNION
	PIPE ANCHOR
	FLEXIBLE CONNECTOR
	PIPE CAP/STUB-OUT
	DIRECTION OF FLOW
	PIPE DOWN
	PIPE UP
	PIPE TEE UP
	PIPE TEE DOWN

PLUMBING ABBREVIATIONS

NOTE: THIS IS A MASTER SCHEDULE. NOT ALL ABBREVIATIONS CONTAINED HEREIN MAY APPEAR ON THE DRAWINGS.

AFF	ABOVE FINISHED FLOOR
AP	ACCESS PANEL
ASHRAE	AMERICAN SOCIETY OF HEATING, REFRIGERATION, AND AIR CONDITIONING ENGINEERS
ASPE	AMERICAN SOCIETY OF PLUMBING ENGINEERS
AV	ACID VENT
AW	ACID WASTE
BFD	BACKFLOW PREVENTION DEVICE
BFF	BELOW FINISHED FLOOR
BHP	BRAKE HORSE POWER
BTUH	BRITISH THERMAL UNIT PER HOUR
CD	CONDENSATE DRAIN
CFM	CUBIC FEET PER MINUTE
CHAR	CHARACTERISTICS
CO	CLEANOUT
CW	COLD WATER
D	DRAIN
DIA	DIAMETER
DN	DOWN
(E)	EXISTING TO REMAIN
EFF	EFFICIENCY
ELEC	ELECTRICAL
EWT	ENTERING WATER TEMPERATURE
°F	FAHRENHEIT
FCO	FLOOR CLEANOUT
FPM	FEET PER MINUTE
G	GAS
GA	GAGE OR GAUGE
GAL	GALLONS
GCO	GRADE CLEANOUT
GI	GREASE INTERCEPTOR
GPF	GALLONS PER FLUSH
GPM	GALLONS PER MINUTE
GW	GREASE WASTE
HD	HEAD
HP	HORSEPOWER
HPG	HIGH PRESSURE GAS
HR	HOUR
HW	HOT WATER
IBC	INTERNATIONAL BUILDING CODE
IE	INVERT ELEVATION
IMC	INTERNATIONAL MECHANICAL CODE
IPC	INTERNATIONAL PLUMBING CODE
KW	KILOWATT
LBS	POUNDS
LWT	LEAVING WATER TEMPERATURE
MAX	MAXIMUM
MBH	ONE THOUSAND BTUH
MCA	MINIMUM CIRCUIT AMPS
MIN	MINIMUM
MOCP	MAXIMUM OVER CURRENT PROTECTION
MPG	MEDIUM PRESSURE GAS
N/A	NOT APPLICABLE
NC	NORMALLY CLOSED
NEC	NATIONAL ELECTRIC CODE
NFPA	NATIONAL FIRE PROTECTION ASSOCIATION
NIC	NOT IN CONTRACT
NO	NORMALLY OPEN
NTS	NOT TO SCALE
OFCI	OWNER FURNISHED, CONTRACTOR INSTALLED
PD	PRESSURE DROP
PRV	PRESSURE REDUCING VALVE
PSI	POUNDS PER SQUARE INCH
PSIA	POUNDS PER SQUARE INCH ABSOLUTE
PSID	POUNDS PER SQUARE INCH DIFFERENTIAL
PSIG	POUNDS PER SQUARE INCH GAUGE
(R)	EXISTING TO BE RELOCATED
RD	ROOF DRAIN
RPM	REVOLUTIONS PER MINUTE
SOI	SAND OIL INTERCEPTOR
SPECS	SPECIFICATIONS
SQ	SQUARE
SQFT	SQUARE FEET
T	TEMPERATURE
TW	TEMPERED WATER
TYP	TYPICAL
UBC	UNIFORM BUILDING CODE
UMC	UNIFORM MECHANICAL CODE
UON	UNLESS OTHERWISE NOTED
UPC	UNIFORM PLUMBING CODE
V	VENT
V/PH/HZ	VOLTAGE/PHASE/HERTZ
VFD	VARIABLE FREQUENCY DRIVE
VTR	VENT THROUGH ROOF
WCO	WALL CLEANOUT
WG	WATER GAUGE
(X)	EXISTING TO BE REMOVED

DRAWING INDEX

IMEG
370 E. WINDMILL LANE
SUITE 100, LAS VEGAS, NV
89123
PH: 702.896.1100
www.imegcorp.com
IMEG #23002690.00

PROFESSIONAL ENGINEER - STATE OF NEVADA
DUSTIN T. HART
Exp: 6/30/2025
No. 24362
JUL 31 2023

IZ design studio
design...sustainability...architecture.
7229 W. Sahara Ave Suite 100
Las Vegas, NV 89117
Nevada
tel. 702.441.0026
Fax. 702.475.4755
www.izdesignstudio.com

SYMBOL LIST AND ABBREVIATIONS
SNHD
SNHD BEHAVIORAL HEALTH 2
278 S. DECATUR BLVD
LAS VEGAS, NV 89107

DELTA NO.	REVISION NO.	DESCRIPTION	DATE
1		CORRECTION#1	08.02.2023

Sheet Name
Project Name

Project Number	21479
Date	06.16.2023
Drawn By	IMEG
Checked By	PE

P000

PLUMBING SPECIFICATIONS

PART ONE - GENERAL

1. THE OWNER HAS CONTRACT LANGUAGE THAT NEEDS TO BE READ PRIOR TO BID SUBMISSION AS THERE ARE ITEMS THAT MAY SUPPLEMENT OR SUPERSEDE ITEMS NOTED HEREIN. THE OWNER'S CONTRACT DOCUMENTS HAS INFORMATION ON HOW WORK IS TO BE PERFORMED, HOW DOCUMENT SUBMITTALS ARE PROVIDED, RECORD DOCUMENTS ARE SUBMITTED, ETC. SEE THE ARCHITECTURAL DOCUMENTS FOR ADDITIONAL DIVISION 1 INFORMATION.
2. CODE USED IN DESIGN: IBC 2018, UMC-2018, UPC-201, IECC-2018
3. ALL WORK SHALL BE DONE IN ACCORDANCE WITH THE LATEST ADOPTED EDITIONS OF THE APPLICABLE INTERNATIONAL BUILDING CODE (IBC), LOCAL MECHANICAL CODE (UMC, IMC, ETC.), LOCAL PLUMBING CODE (UPC, IPC, ETC.), NATIONAL ELECTRIC CODES (NEC) AND ALL OTHER APPLICABLE FEDERAL, STATE, AND LOCAL REGULATIONS.
4. THE CONTRACTOR MUST ARRANGE A VISIT TO THE WORK SITE PRIOR TO BID SUBMISSION TO FULLY UNDERSTAND THE EXISTING CONDITIONS. THE DRAWINGS ARE DIAGRAMMATIC AND SHOW THE WORK INTENT BUT NOT NECESSARILY ALL EXISTING OBSTRUCTIONS, PIPE OR DUCT BENDS. DETERMINING SITE CONDITIONS AND ADJUSTING THE INSTALLATION IS THE RESPONSIBILITY OF THE CONTRACTOR
5. THE CONTRACTOR SHALL PROVIDE THE WORK SHOWN ON THE DRAWINGS AND SPECIFIED FOR THEIR INDIVIDUAL SECTIONS OF WORK. THE WORD "WORK" SHALL MEAN ALL LABOR, TRANSPORTATION, MATERIAL, EQUIPMENT, TOOLS, INSTALLATION, SUPERVISION AND ANY OTHER INCIDENTAL ITEMS OR SERVICES NECESSARY FOR THE PROPER INSTALLATION AND OPERATION OF THE COMPLETE SYSTEMS, WHICH SHALL BE PROVIDED WHETHER OR NOT SPECIFICALLY INDICATED OR NOTED.
6. ALL GENERAL CONDITIONS, SPECIAL REQUIREMENTS OR GENERAL REQUIREMENTS OF THE CONSTRUCTION SPECIFICATIONS ARE MADE PART OF THIS SPECIFICATION AND HAVE THE SAME FORCE AND AFFECT AS IF COMPLETELY REPRODUCED.
7. THE WORD "PROVIDE" SHALL MEAN FURNISH AND INSTALL, MAKE ALL FINAL CONNECTIONS AND LEAVE IN AN APPROVED COMPLETE OPERATING CONDITION.
8. THE CONTRACTOR SHALL BE RESPONSIBLE FOR PAYING ALL FEES AND OBTAINING ALL PERMITS AND INSPECTIONS REQUIRED FOR THE WORK.
9. THE CONTRACTOR SHALL CAREFULLY EXAMINE ALL CONTRACT DOCUMENTS. THE CONTRACTOR SHALL COORDINATE THE WORK WITH ALL OTHER TRADES INCLUDING, BUT NOT LIMITED TO, THE CONTRACT DOCUMENTS, SHOP DRAWINGS, ETC. FOR ALL GENERAL CONSTRUCTION, STRUCTURAL, MECHANICAL, ELECTRICAL AND SPECIALTY CONTRACTOR WORK. THE CONTRACTOR SHALL BE RESPONSIBLE FOR THE PROPER FITTING OF MATERIAL INTO THE BUILDING AS PLANNED, WITHOUT INTERFERENCE WITH OTHER WORK, AND SHALL MAKE REASONABLE MODIFICATIONS IN THE LAYOUTS NEEDED TO PREVENT CONFLICT WITH OTHER TRADES, TO PROVIDE ACCESS AND FOR THE PROPER EXECUTION OF THE WORK.
10. DRAWINGS ARE DIAGRAMMATIC AND SCHEMATIC IN NATURE, AND INDICATE THE TYPE, SIZE, ARRANGEMENT AND LOCATION OF MATERIALS AND EQUIPMENT. WORK INCLUDES CERTAIN COMPONENTS, APPURTENANCES AND RELATED SPECIALTIES THAT MAY NOT BE SHOWN. CONTRACTOR SHALL PROVIDE ALL NECESSARY ITEMS TO COMPLETE THE WORK ACCORDING TO INDUSTRY STANDARDS. IT IS THE INTENT OF THE DRAWINGS AND SPECIFICATIONS TO CALL OUT FOR FINISHED WORK, TESTED AND READY FOR OPERATION. DO NOT SCALE DRAWINGS. ARRANGEMENT OF EQUIPMENT AND ROUTING OF PIPES AND DUCTWORK, ETC. INDICATED ON DRAWINGS SHALL BE ROUTED PLUMB AND AT RIGHT ANGLES TO BUILDING CONSTRUCTION AND MAY REQUIRE MODIFICATION DUE TO UNFORESEEN CONDITIONS AND REQUIRE ON SITE REVISIONS DURING CONSTRUCTION. (SEE ALSO "BIDDING").
11. ALL WORK REQUIRED FOR IDENTICAL/SIMILAR ITEMS SHOWN ON THE DRAWINGS SHALL BE PROVIDED, ALTHOUGH EACH SPECIFIC IDENTICAL/SIMILAR ITEM MAY NOT BE SHOWN IN DETAIL.
12. THE CONTRACTOR SHALL SUBMIT ELECTRONIC PDF SHOP DRAWINGS AND TECHNICAL DATA SHEETS FOR ALL EQUIPMENT AND MATERIALS SPECIFIED HEREIN TO THE ENGINEER. THE ENGINEER SHALL REVIEW SHOP DRAWINGS AND TECHNICAL DATA SHEETS FOR CONFORMANCE WITH THE CONTRACT DOCUMENTS AND ISSUE A WRITTEN ASSESSMENT TO THE OWNER PRIOR TO COMMENCEMENT OF WORK. THE CONTRACTOR SHALL BE RESPONSIBLE FOR ALL ENGINEERING FEES NECESSARY TO CHANGE PERMIT DOCUMENTS BASED ON ALTERNATE SUBMITTAL PACKAGES/EQUIPMENT SUBSTITUTIONS.
13. ALL SUBSTITUTIONS SHALL BE SUBMITTED TO THE ENGINEER FOR CONSIDERATION PRIOR TO BIDDING. THE OWNER'S REPRESENTATIVE SHALL PREAPPROVE ANY PROPOSED SUBSTITUTION IN WRITING. THE CONTRACTOR SHALL BE RESPONSIBLE FOR COORDINATING ALL REQUIREMENTS ASSOCIATED WITH SUBSTITUTED EQUIPMENT OR MATERIALS WITH OTHER BUILDING TRADES, INCLUDING ALL ELECTRICAL, STRUCTURAL, OR ARCHITECTURAL ELEMENTS. (SHOP DRAWING REVIEW DOES NOT RELIEVE THE CONTRACTOR FROM SUBSTITUTE EQUIPMENT COORDINATION REQUIREMENTS.) SUBSTITUTED EQUIPMENT, ANYTHING DIFFERENT FROM SPECIFIED ON THE DOCUMENTS, MUST BE IDENTIFIED AS SUCH DURING THE SUBMITTAL PROCESS. THE CONTRACTOR SHALL IDENTIFY AND ANNOTATE ALL REVISED REQUIREMENTS PER BUILDING TRADE ON THE SHOP DRAWINGS. THE CONTRACTOR SHALL ALSO IDENTIFY ALL COST DEBITS OR CREDITS IN WRITING FOR THE PROPOSED CHANGES PER BUILDING TRADE.
14. UPON COMPLETION OF CONSTRUCTION,
    - 14.1. THE CONTRACTOR SHALL SUPPLY THE ENGINEER WITH AN ELECTRONIC CAD AND PDF SET OF AS-BUILT DOCUMENTS ACCURATELY SHOWING THE MATERIALS AND EQUIPMENT AS INSTALLED.
    - 14.2. THE CONTRACTOR SHALL PROVIDE THE BUILDING OWNER OR REPRESENTATIVE WITH AN ELECTRONIC (PDF) MANUAL WITH DETAILED OPERATING AND MAINTENANCE INSTRUCTIONS FOR EACH PIECE OF EQUIPMENT PROVIDED, WITH CONTENT MEETING THE REQUIREMENTS NOTED BELOW:
        - 14.2.1. SUBMITTAL DATA STATING EQUIPMENT SIZE AND SELECTED OPTIONS.
        - 14.2.2. MANUFACTURER'S OPERATION MANUALS AND MAINTENANCE MANUALS. REQUIRED ROUTINE MAINTENANCE ACTIONS SHALL BE CLEARLY IDENTIFIED.
        - 14.2.3. NAME, ADDRESS AND CONTACT NUMBER FOR AT LEAST ONE SERVICE AGENCY.
        - 14.2.4. HVAC AND SERVICE HOT WATER CONTROLS SYSTEM MAINTENANCE AND CALIBRATION INFORMATION, INCLUDING WIRING DIAGRAMS, SCHEMATICS AND CONTROL SEQUENCE DESCRIPTIONS. DESIRED OR FIELD DETERMINED SET-POINTS SHALL BE PERMANENTLY RECORDED ON A CONTROLS DRAWING AT CONTROL DEVICES OR IN SYSTEM PROGRAMMING INSTRUCTIONS.
        - 14.2.5. A NARRATIVE OF HOW EACH SYSTEM IS INTENDED TO OPERATE, INCLUDING RECOMMENDED SET-POINTS.
        - 14.2.6. COPIES OF GUARANTIES AND/OR WARRANTIES.
15. ALL MATERIALS AND WORKMANSHIP SHALL BE GUARANTEED FOR A MINIMUM OF ONE (1) YEAR FROM DATE OF ACCEPTANCE BY OWNER. REFRIGERATION COMPRESSORS SHALL BE GUARANTEED FOR A MINIMUM OF FIVE (5) YEARS FROM DATE OF OWNER'S ACCEPTANCE. IN ADDITION, THE CONTRACTOR SHALL GUARANTEE THAT THE INSTALLATION WHEN OPERATED IN ACCORDANCE WITH THE CONTRACTOR'S INSTRUCTIONS WILL DEVELOP CAPACITY AND CHARACTERISTICS AS SPECIFIED AND WILL FULFILL EACH AND EVERY REQUIREMENT OF THE DRAWINGS AND SPECIFICATIONS. SHOULD THE INSTALLATION IN ANY WAY FAIL TO DO SO, THE CONTRACTOR WILL, WITHOUT DELAY AND WITHOUT COST TO THE OWNER, PROVIDE WHATEVER ADDITIONAL EQUIPMENT, MATERIAL, AND LABOR REQUIRED TO CORRECT THE DEFICIENCY AND COMPLY WITH THE REQUIREMENTS OF THE DRAWINGS AND SPECIFICATIONS.
16. CONTRACTOR SHALL CHECK AND VERIFY ALL SIZES, DIMENSIONS, AND CONDITIONS BEFORE STARTING ANY WORK. ANY DEVIATIONS OR PROBLEMS SHALL BE TRANSMITTED TO THE ENGINEER FOR REVIEW.
17. PROVIDE BASE AND COUNTER FLASHING FOR ITEMS PENETRATING THE ROOF OR EXTERIOR WALLS.
18. STARTERS, VFDs DISCONNECT SWITCHES AND CONTROLS FOR MOTORS IF NOT UNIT MOUNTED AND/OR SUPPLIED BY THE EQUIPMENT MANUFACTURER, UNLESS NOTED SPECIFICALLY OTHERWISE SHALL FOLLOW:
    - 18.1. VFDs TO BE SUPPLIED BY THE MECHANICAL CONTRACTOR AND INSTALLED BY THE ELECTRICAL CONTRACTOR. FINAL LOCATIONS COORDINATED WITH THE ENGINEER. WIRING BETWEEN THE VFD AND THE MOTOR SHALL BE SHIELDED POWER CABLE DESIGNED FOR VFD APPLICATIONS, GROUNDED AT BOTH ENDS.
    - 18.2. UNLESS NOTED OTHERWISE, LOOSE MOTOR STARTERS, COMBINATION STARTERS, DISCONNECT SWITCHES, MOTOR RATED SWITCHES, TOGGLE SWITCHES, ETC. TO BE SUPPLIED AND INSTALLED BY THE ELECTRICAL CONTRACTOR.
    - 18.3. CONTROL AND INTERLOCKING WIRING SHALL BE FURNISHED AND INSTALLED BY CONTRACTOR PERFORMING CONTROLS WORK. (SEE AUTOMATIC TEMPERATURE CONTROLS SECTION FOR ADDITIONAL INFORMATION WITH REGARD TO THIS WIRING RULE.)
19. ALL WORK SHOWN IS NEW UNLESS NOTED OTHERWISE.
20. MAINTAIN OCCUPANCY AND FIRE WALL SEPARATION INTEGRITY AS REQUIRED. REFER TO ARCHITECTURAL PLANS FOR LOCATIONS OF ALL OCCUPANCY/FIREWALL SEPARATIONS AND SPECIFIC DETAILS FOR CONSTRUCTION. PROVIDE ALL NECESSARY FIRE AND SMOKE FIRE DAMPERS, ACCESS DOORS, CAULKING, ETC. FOR APPROVED INSTALLATION.
21. IECC COMPLIANCE: THE CONTRACTOR IS RESPONSIBLE FOR COMPLYING WITH AND PERFORMING ALL REQUIREMENTS AND WORK SET FORTH IN THE IECC COMPLIANCE CERTIFICATE THAT IS INCLUDED IN THESE DOCUMENTS.

BIDDING

1. THE CONTRACTOR SHALL VISIT THE SITE PRIOR TO SUBMITTING A BID TO BECOME FAMILIAR WITH THE EXISTING CONDITIONS. THE CONTRACTOR SHALL COMPARE THE WORK SPECIFIED IN THE CONTRACT DOCUMENTS WITH THE EXISTING CONDITIONS. THE CONTRACTOR SHALL IDENTIFY AND NOTATE ALL WORK OR CONDITIONS THAT ARE DIFFERENT FROM THE CONTRACT DOCUMENTS OR THEIR INTENT. THE CONTRACTOR SHALL, UPON DISCOVERY, IMMEDIATELY NOTIFY AND REPORT, IN WRITING, ANY DISCREPANCIES TO THE ENGINEER. NO EXTRAS OR CHANGE ORDERS WILL BE ALLOWED FOR FAILURE TO PERFORM THE PRE-BID SITE VISIT.
2. BASE PROPOSAL ON MANUFACTURER NAMES LISTED UNLESS "OR EQUAL" IS INDICATED. PROVIDE SUBSTITUTION REQUESTS A MINIMUM OF FIVE (5) BUSINESS DAYS PRIOR TO BID DATE CLOSING TO ALLOW TIME FOR DUE CONSIDERATION OF PROPOSED ALTERNATE. DETERMINATION OF SUBSTITUTION OF EQUALITY RESTS SOLELY WITH THE ENGINEER.

PART TWO - PRODUCTS

PLUMBING EQUIPMENT

1. PROVIDE PLUMBING EQUIPMENT AS SPECIFIED AND/OR SCHEDULED HEREIN AND IN ACCORDANCE WITH MANUFACTURER'S PUBLISHED INSTALLATION INSTRUCTIONS. EQUIPMENT SHALL OPERATE ACCORDING TO THE MANUFACTURER'S "OWNER'S OPERATING AND MAINTENANCE MANUAL" TROUBLE FREE AND CONFORMING TO THE ONE-YEAR WARRANTEE.

PLUMBING PRODUCTS

1. PRODUCTS THAT CONTACT DRINKING WATER:
    - 1.1. DRINKING WATER SYSTEM COMPONENTS SHALL COMPLY WITH THE REQUIREMENTS OF NSF/ANSI 61 AND NSF/ANSI 372 RESTRICTING THE USE OF LEAD CONTAINING MATERIALS.
2. DOMESTIC WATER PIPING:
    - 2.1. ABOVE GROUND: TYPE "L" COPPER (ASTM B-88), WROUGHT FITTINGS (ASME B16.22), JOINTS: ANSI/ASTM B32, SOLDER: 95/5 TIN/ANTIMONY, 0.2% MAX LEAD. (SADDLE TAPS, SHARKBITE, PROPRESS, EXTRUDED OUTLETS ("PULLED TEES") OR SIMILAR FITTINGS NOT PERMITTED UNLESS SPECIFICALLY APPROVED. (SADDLE TAPS WHEN APPROVED UNDER EXTREME CIRCUMSTANCES TO BE POWERSTOP SADDLE BY POWERSEAL PIPELINE PRODUCTS CORP., MODEL 3425)
    - 2.2. UNDER GROUND/BELOW GRADE: PROTECTED FROM SOIL, TYPE "K" COPPER (ASTM B-88), HARD DRAWN, WROUGHT FITTINGS (ASME B16.22) JOINTS: AWS A5.8, BCuP SILVER BRAZE.
3. DOMESTIC WASTE & VENT PIPING MATERIALS:
    - 3.1. ABOVE GROUND AND BELOW GRADE NO-HUB CAST IRON
        - 3.1.1. PIPE AND FITTINGS: SHALL BE MARKED WITH CISP INSTITUTE AND LISTED BY NSF. NO-HUB COUPLINGS SHALL CONFORM TO CISPI STD 310 AND MARKED NSF. COUPLINGS SHALL BE HUSKY HIGH PERFORMANCE HEAVY DUTY SD-4000.
        - 3.1.2. EPOXY COATED PIPE AND FITTINGS: NEWAGE CASTING. COUPLINGS SHALL BE HUSKY HIGH PERFORMANCE HEAVY DUTY SD-4000 OR NEWAGE EXTRA HEAVY DUTY.
        - 3.1.3. CAST IRON PIPE SHALL CONFORM TO ASTM-A-888 OR CISPI 30.
        - 3.1.4. ALTERNATE ACCEPTABLE MATERIAL: DWV COPPER.
    - 3.2. STAINLESS STEEL ABOVE GROUND, GREASE WASTE PIPING: JOSAM STAINLESS STEEL PUSH-FIT DRAINAGE SYSTEM. (INCLUDES FLOOR SINKS & DRAINS) EACH JOINT TO BE COMPLETE WITH A JA-3000 SERIES JOINT CLAMP.
    - 3.3. THIS PROJECT:

	CAST IRON	EPOXY COATED C.I.	STAINLESS STEEL	SCHEDULE 40 PVC	CPVC	ABS
WASTE	X					
WASTE BELOW GRADE				X		
VENT	X					

    - 3.3. PVC SCH. 40 SOLID WALL PIPE AND PVC DWV FITTINGS: PIPE TO CONFORM TO ASTM D 1784. PVC PIPE TO BE IRON PIPE SIZE (IPS) CONFORMING TO ASTM D 1785 AND D 2665. PVC FITTINGS TO ASTM D 2665. BURIED PIPE SHALL BE INSTALLED PER LOCAL CODE AND ASTM D 2321 AND F 1668. SOLVENT CEMENT JOINTS TO BE PRIMER (PER ASTM F 656) AND SOLVENT CEMENT (PER ASTM D 2564) (FOAM CORE PIPE NOT APPROVED.)
        - 3.3.1. PVC MAY ONLY BE USED BELOW GRADE WHERE ACCEPTABLE SOIL CONDITIONS ARE CONFIRMED TO EXIST.
        - 3.3.2. CPVC: FOR USE, ABOVE GRADE, IN PLENUM SPACES TO BE SCH 40 CPVC THAT MEETS FLAME & SMOKE SPREAD OF <25/<50 WITHOUT THE AID OF INSULATION OR ANY OTHER SUPPLEMENT.
4. CONDENSATE DRAIN PIPING: TYPE "M" COPPER (ASTM B-88), WROUGHT FITTINGS (ASME B16.22), JOINTS: ANSI/ASTM B32, SOLDER: 95/5 TIN/ANTIMONY, 0.2% MAX LEAD.
5. PIPE INSULATION: ALL DOMESTIC COLD WATER PIPING (IN UNCONDITIONED SPACES ONLY) AND ALL DOMESTIC HOT WATER PIPING ABOVE GROUND SHALL BE INSULATED WITH 1" THICK FIBERGLASS PIPE INSULATION WITH ALL-SERVICE JACKET AND MAXIMUM K VALUE OF 0.27 AT 75°F. WHERE CLEARANCE LIMITATIONS PREVENT THE USE OF FIBERGLASS INSULATION, A MINIMUM 3/4" THICK CLOSED CELL NEOPRENE PIPE INSULATION MAY BE USED. PROVIDE METAL SADDLES AND RIGID INSULATION AT HANGERS WHERE SYSTEM WEIGHT COMPRESSES INSULATION. PROVIDE ADA COMPLIANT INSULATION ON EXPOSED UNDER SINK PIPING.
6. PIPE HANGERS: PIPE SIZES 1/2" TO 1 1/2": MALLEABLE IRON, CARBON STEEL, ADJUSTABLE SWIVEL, SPLIT RING. PIPE SIZES 2" TO 4": CARBON STEEL, ADJUSTABLE, CLEVIS. PIPE SIZES 6" AND OVER THAT ARE SUBJECT TO EXPANSION & CONTRACTION: ADJUSTABLE STEEL YOKE, CAST IRON ROLL, DOUBLE HANGER. SYSTEM LOAD (PIPE FULL OF DESIGN LIQUID OR GAS) ON HANGER MUST NOT EXCEED MORE THAN 85% OF HANGER CAPACITY.
7. FLOOR DRAINS, UNLESS OTHERWISE SPECIFICALLY SPECIFIED: MIFAB F1000(-C), HD STAINLESS STEEL STRAINER, CAST LACQUERED BODY, TRAP PRIMER CONNECTION, ANCHOR FLANGE, WEEPHOLES. WITH MEMBRANE CLAMP WHERE APPLICABLE. (2, 3, 4, 5, 6 INCH PIPE SIZE)
8. FLOOR SINKS, UNLESS OTHERWISE SPECIFICALLY SPECIFIED: KITCHEN AND BAR LOCATIONS - MIFAB FS1930-FL (8" DEEP) 304 S.S.; ALL OTHER AREAS: 12"x12"x8" ENAMEL COATED CAST IRON; TRAP 2" TO 4" PIPE SIZE, NO-HUB; ANCHOR FLANGE, MEMBRANE CLAMP WHERE REQUIRED; PRIMER CONNECTION; $\frac{1}{2}$, $\frac{3}{4}$ OR FULL GRATE PER DOCUMENTS.
9. WATER SUPPLY TO A DRINK DISPENSER, CARBONATED OR NON-CARBONATED TO HAVE A WATTS LF009QT-S. WATER SUPPLY TO A COFFEE MACHINE OR ICE MAKER TO BE COMPLETE WITH A WATTS 9D (UNLESS THE AHJ REQUIRES A REDUCED PRESSURE PRINCIPAL OR FIELD TESTABLE DEVICE SUCH AS A WATTS LF009QT-S). PROVIDE A DRAIN FROM ALL BACKFLOW DEVICES.
10. DOMESTIC HOT WATER RETURN BALANCING VALVES: UNLESS NOTED OTHERWISE, CALIBRATED: OVENTROP MTR (ANSI/NSF 372); DYNAMIC: HAYS 2517LF.

PLUMBING NOTES

1. DIELECTRIC FITTINGS SHALL BE USED WHEREVER DISSIMILAR METALS ARE JOINED.
2. PROVIDE ACCESS PANELS IN CEILINGS & WALLS TO ACCESS MECHANICAL/PLUMBING EQUIPMENT AND APPURTENANCES WHERE REQUIRED. DRYWALL CEILINGS: GFRG OR BAUCO•PLUS II. DRYWALL WALLS: BAUCO•PLUS II. RATED DRYWALL WALLS OR CEILINGS: ACUDOR FW-5050-DW. MINIMUM SIZE FOR ACCESS OF EQUIPMENT: 24"x24" OR PER LOCAL CODE, WHICH EVER IS LARGER.
3. PLUMBING FIXTURES: PROVIDE CHROME PLATED ANGLE STOPS WITH ESCUTCHEON PLATES AT PLUMBING FIXTURES. ALL PLUMBING FIXTURES SHALL COMPLY WITH LOCAL REGULATIONS AND ADOPTED WATER CONSERVATION CODES.
4. DISINFECT ALL POTABLE WATER SYSTEMS IN ACCORDANCE WITH PLUMBING CODE AND/OR, AWWA STANDARD. PROVIDE WRITTEN CONFIRMATION TO OWNERS REPRESENTATIVE THAT THIS WORK HAS BEEN COMPLETED.
5. GAUGES: TEMPERATURE: INTERIOR - WEISS VARI-ANGLE DIGITAL WITH 316 SS THERMOWELL, EXTERIOR WITH DCV-4 OUTDOOR WATERPROOF COVER. PRESSURE: WEISS DIGITAL DUGY3-xxx-2L (PG - RFI FOR RANGE PER APPLICATION)
6. WHERE VICTAULIC SYSTEMS ARE APPROVED ON A PER-PROJECT BASIS, "ROUST-A-BOUT" FITTINGS ARE NOT ALLOWED.
7. ALL EQUIPMENT SHALL BE RATED IN EXCESS OF THE AVAILABLE FAULT CURRENT AT THE POINT OF CONNECTION.

PART THREE - EXECUTION

1. THE CONTRACTOR SHALL PROVIDE ALL SLEEVES, OPENINGS, CUTTING AND PATCHING NECESSARY FOR THE INSTALLATION OF THE WORK. CUTTING AND PATCHING SHALL BE DONE BY WORKMEN SKILLED IN THE TRADES REQUIRED AND PAID BY THE CONTRACTOR REQUIRING THE WORK COMPLETED. SYSTEMS PASSING THROUGH WATER PROOFING OR DAMP PROOFING SHALL BE WATER TIGHT. SYSTEMS PASSING THROUGH FIRE RATED CONSTRUCTION SHALL BE FIRE PROOFED WITHER MATERIAL APPROVED FOR THE FIRE AND TEMPERATURE RATING OF THE ASSEMBLY AND U.L. LISTED. (IF THE ARCHITECT HAS NOT PROVIDED A STANDARD DRAWING/ASSEMBLY FOR AN APPLICATION AND ONE IS NOT AVALIABLE, THE CONTRACTOR IS RESPONSIBLE TO OBTAIN AN "ENGINEERING JUDGEMENT" AND ASSOCIATED DRAWING FOR THE APPLICATION.)
2. EQUIPMENT LOCATED ON A ROOF WHERE NO PARAPET OR GUARD RAIL, 42" HIGH OR GREATER, EXISTS, MUST BE INSTALLED A MINIMUM OF 10 FEET FROM THE ROOF EDGE. IF NOT POSSIBLE A STATIC LINE ANCHOR POINT PER ANSI/ASSE STANDARDS IS TO BE PROVIDED.
3. THE CONTRACTOR SHALL PROVIDE ALL RIGGING, HANDLING OF MATERIALS AND EQUIPMENT, AND THE NECESSARY PROTECTION FOR MATERIALS AND EQUIPMENT.
4. THE CONTRACTOR WILL PROTECT THE WORK AND MATERIAL AGAINST DIRT, THEFT, INJURY OR DAMAGE UNTIL ACCEPTED BY OWNER. ALL WORK SHALL BE TURNED OVER TO OWNER CLEAN AND IN NEW CONDITION.
5. WHERE FLOOR DRAINS OR FLOOR SINKS OR SIMILAR FIXTURES ARE INSTALLED IN FLOORS THAT ARE NOT SLAB-ON-GRADE, OR PIPE PASS THROUGH SAID FLOORS AND THE FLOOR IS A FIRE RATED ASSEMBLY, PER CODE, THE OPENING CREATED TO ACCEPT THE DRAIN AND THE DRAIN FITTING OR PIPING ASSEMBLY THROUGH THE FLOOR MUST USE A LISTED SYSTEM TO BE TEMPERATURE AND FIRE RATED TO MATCH THE RATING OF THE FLOOR (MIN 2 HOUR).
6. PROVIDE TRAP PRIMERS (OR TRAP GUARDS WHERE APPROVED) FOR FLOOR DRAINS, FLOOR SINKS AND OTHER DEVICES WHERE TRAP SEALS EXIST.
7. EQUIPMENT CONDENSATE DRAINS: FAN COIL, AHU AND OTHER SIMILAR EQUIPMENT CONDENSATE DRAINS MAY OR MAY NOT BE DOCUMENTED ON THE PROJECT DRAWINGS. IT IS THE RESPONSIBILITY OF THE CONTRACTOR TO PROVIDE CONDENSATE DRAINS TO AN APPROVED RECEPTOR, SIZE DRAIN TO MATCH OR EXCEED CODE MINIMUMS. PROVIDE A CONDENSATE PUMP WHERE REQUIRED (IE: LITTLE GIANT NXTGEN)
8. EACH CONTRACTOR SHALL PROVIDE ALL FOUNDATIONS, HANGERS, AND SUPPORTS FOR ALL EQUIPMENT SUPPLIED AND/OR INSTALLED UNDER THEIR WORK. ANY EQUIPMENT WITH MOVING PARTS SHALL BE PROVIDED WITH VIBRATION ISOLATION AND FLEXIBLE CONNECTIONS TO PIPING AND OR DUCTWORK IF APPLICABLE. MISCELLANEOUS STEEL AND ANCHORS REQUIRED FOR THE INSTALLATION OF THE CONTRACTORS EQUIPMENT IS THE RESPONSIBILITY OF THE CONTRACTOR AND THE RETENTION OF A STRUCTURAL ENGINEER OR OTHER DESIGN DISCIPLINE TO COMPLETE THE WORK IS THE RESPONSIBILITY OF THE CONTRACTOR. EG: THE USE OF CONCRETE ANCHORS WILL REQUIRE DOCUMENTATION APPROVAL FROM A STRUCTURAL ENGINEER RETAINED BY THE CONTRACTOR.
9. WHERE PIPES OR CONDUITS PASS THROUGH WALLS, FLOORS, OR CEILINGS IN FINISHED AREAS, THEY SHALL BE FURNISHED WITH ESCUTCHEON PLATES (COLOR PER ARCHITECT AND/OR INTERIOR DESIGNER).
10. WHERE SANITARY, ROOF DRAINAGE OR CONDENSATE LINES PASS THROUGH KITCHEN, OTHER FOOD PREPARATION AREA OR FOOD STORAGE AREA CEILING SPACES, THE LINES SHALL BE PANNED AND DRAINED TO AN APPROVED RECEPTOR.
11. WATER SUPPLY TO MOP SINKS: SUPPLY FITTING TO HAVE BUILT-IN SERVICE STOPS AND CHECK VALVES. (SYMMONS S-2490-CHKS, VB, PAIL HOOK, 8" CENTER, SCREWDRIVER STOPS)
12. PIPES AND/OR CONDUITS PASSING THROUGH WALL, FLOORS AND PARTITIONS SHALL BE PROVIDED WITH SLEEVES. SLEEVES PASSING THROUGH WATER PROOFING OR DAMP PROOFING SHALL BE WATER TIGHT. SLEEVES/PIPES PASSING THROUGH FIRE RATED CONSTRUCTION SHALL BE FIRE PROOFED WITH MATERIAL APPROVED FOR THE FIRE AND TEMPERATURE RATING OF THE ASSEMBLY AND U.L. LISTED. (IF THE ARCHITECT HAS NOT PROVIDED A STANDARD DRAWING/ASSEMBLY FOR AN APPLICATION AND ONE IS NOT AVAILABLE, THE CONTRACTOR IS RESPONSIBLE TO OBTAIN AN "ENGINEERING JUDGEMENT" AND ASSOCIATED DRAWING FOR THE APPLICATION.)
13. AT THE CONCLUSION OF THE JOB, EACH PIECE OF EQUIPMENT, VALVE, SWITCH, STARTER, PANEL, PIPE LINE, CONDUIT, DUCT, ETC., SHALL BE CLEARLY IDENTIFIED WHETHER EXPOSED OR CONCEALED, COVERED OR UNCOVERED, IN ACCORDANCE WITH OSHA AND ANSI REGULATIONS. IDENTIFY PIPES NEAR EACH VALVE WITH "BRANDY-PERMA' CODE PIPE TAPE" OR T. & B. WESTLINE "TEL-A-PIPE" INDICATING DIRECTION OF FLOW, SERVICE, ZONE, AND SIZE. TAPE SHALL BE APPLIED TO PIPE, CONDUIT, OR COVERING. VALVES, CONTROLS, AND DAMPERS SHALL BE IDENTIFIED BY 2-INCH LACQUERED BRASS TAGS WITH STAMPED LETTERS FASTENED WITH "S" HOOKS OR CHAINS. EQUIPMENT IS TO BE IDENTIFIED AS TO FUNCTION AND PURPOSE BY MEANS OF PERMANENTLY ATTACHED LAMINATED ENGRAVED PHENOLIC NAMEPLATES WITH BEVELED EDGES, AND WHITE LETTERS ON BLACK BACKGROUND. (NO ADHESIVE LABELS ALLOWED).
14. AT THE CONCLUSION OF THE WORK, ALL EQUIPMENT AND SYSTEMS SHALL BE BALANCED, ADJUSTED, AND TESTED TO PROVIDE A QUIET-OPERATING, STABLE, AND SAFELY OPERATING SYSTEM(S). DEMONSTRATE OPERATION OF ALL SYSTEMS TO THE OWNER'S DESIGNATED REPRESENTATIVE. THE TEST AND BALANCE WORK SHALL BE PERFORMED IN ACCORDANCE WITH NEBB OR AABC STANDARDS, BY INDEPENDENT, APPROVED, AND CERTIFIED TEST AND BALANCE PERSONNEL.
15. IN LOCATIONS WHERE SEISMIC DESIGN REQUIREMENTS EXIST, THE MECHANICAL/PLUMBING CONTRACTOR IS RESPONSIBLE FOR RETAINING AND PAYING FOR THE DESIGN SERVICES OF A STRUCTURAL ENGINEER TO CREATE THE DESIGN AND INSTALLATION DRAWINGS FOR MECHANICAL/PLUMBING SYSTEMS SEISMIC RESTRAINT SUPPORT, PER THE PROJECT BUILDING CODE. PRIOR TO CONSTRUCTION, THE CONTRACTOR SHALL SUBMIT MECHANICAL SYSTEMS SHOP DRAWINGS BASED UPON MULTI DISCIPLINE COORDINATION. INCLUDED WITH THE SHOP DRAWING SUBMISSION SHALL BE SEISMIC RESTRAINT DRAWINGS NOTING WHERE SEISMIC SUPPORT IS REQUIRED. FOR EACH AREA NOTED NEEDING SEISMIC SUPPORT FOR THE MECHANICAL SYSTEMS, THERE SHALL BE A SEISMIC DRAWING DETAILING THE REQUIRED SUPPORT. THE SEISMIC SUPPORT DRAWINGS SHALL BE SIGNED AND SEALED BY A REGISTERED STRUCTURAL ENGINEER IN THE SAME STATE AS THE PROJECT. IN ADDITION TO THE PROJECT DESIGN TEAM REVIEW, THE SEISMIC SUPPORT DRAWINGS WILL BE ISSUED TO THE LOCAL BUILDING DEPARTMENT FOR REVIEW AS PART OF A DEFERRED SUBMITTAL FOR THE BUILDING DOCUMENTS. COMMENCEMENT OF CONSTRUCTION PRIOR TO BUILDING DEPARTMENT REVIEW IS AT THE CONTRACTOR'S RISK.
16. CONTRACTOR SHALL REFER TO THE ARCHITECTURAL REFLECTED CEILING PLAN FOR EXACT LOCATION OF GRILLES, REGISTERS AND DIFFUSERS.
17. PIPE HANGERS: PIPE SIZES 1/2" TO 1 1/2" - 5'-0" MAX SPACING, 3/8" MIN. ROD DIAMETER; PIPE SIZES 2" TO 3" - 8'-0" MAX SPACING, 1/2" MIN. ROD DIAMETER; PIPE SIZES 4 TO 6"-10'-0" MAX SPACING, 5/8" MIN. ROD DIAMETER.
18. WATER PROOFING AND FLASHING OF PIPE PENETRATIONS THROUGH THE EXTERIOR WALL AND ROOF SHALL BE THE RESPONSIBILITY OF THE INSTALLING MECHANICAL/PLUMBING CONTRACTOR. THE CONTRACTOR SHALL COORDINATE LOCATIONS, MEANS AND METHODS WITH GENERAL CONTRACTOR/OWNER FOR THE VARIOUS BUILDING SYSTEMS. ROOFING MEMBRANE PENETRATIONS MUST BE PERFORMED BY A CONTRACTOR THAT IS WARRANTY APPROVED FOR THE SPECIFIC ROOFING SYSTEM.
19. CONTRACTOR SHALL OBTAIN FROM THE ARCHITECT THE EXACT LOCATION OF EQUIPMENT, PLUMBING FIXTURES, FLOOR DRAINS AND ANY OTHER APPARATUS SPECIFIED IN THESE DRAWINGS.
20. PROVIDE CLEAN OUTS IN SANITARY, WASTE AND DRAIN LINES AS SHOWN AND AS REQUIRED BY LOCAL CODE. ALL CLEANOUTS SHALL BE READILY ACCESSIBLE. PROVIDE TWO WAY CLEANOUTS IN GREASE WASTE LINES AT 50 FOOT INTERVALS OR LESS.
21. PROVIDE BALANCE VALVE FOR HOT WATER RETURN SYSTEM AS REQUIRED.
22. PROVIDE PRESSURE REDUCING VALVES IN PLUMBING SYSTEMS AS REQUIRED.
23. PROVIDE HEAT TRAPS (INTEGRAL OR EXTERNAL) FOR ALL WATER HEATING EQUIPMENT.
24. INSTALL CONDENSATE PIPING, WITH P-TRAP, FULL SIZE FROM EQUIPMENT TO FLOOR SINK, MOP SINK OR TAILPIECE (3/4" MAXIMUM CONDENSATE DRAIN LINE SIZE FOR TAILPIECE).

IMEG
370 E. WINDMILL LANE
SUITE 100, LAS VEGAS, NV
89123
PH: 702.896.1100
www.imegcorp.com
IMEG #23002690.00

DUSTIN T. HART
Exp: 6/30/2025
No. 24362
JUL 31 2023

IZ design studio
design . . . sustainability . . . architecture.
tel. 702.441.0026
fax. 702.475.4755
www.izdesignstudio.com
7229 W. Sahara Ave Suite 120
Las Vegas, NV 89117

Sheet Name
SPECIFICATIONS

Project Name
SNHD
SNHD BEHAVIORAL HEALTH 2
278 S. DECATUR BLVD
LAS VEGAS, NV 89107

DELTA NO.	REVISION NO.	DESCRIPTION	DATE

Project Number	21479
Date	06.16.2023
Drawn By	IMEG
Checked By	PE

P001

PLUMBING FIXTURE SPECIFICATIONS

MARK	DESCRIPTION
S-1	SINK -ELKAY MODEL LRAD1918, 19"X18"X6" DEEP, 18 GAUGE TYPE 304 STAINLESS STEEL, SELF RIMMING, FAUCET: JUST MANUFACTURING MODEL #JS-20. FOOT PEDAL: JUST MANUFACTURING MODEL #JFV-320, WALL MOUNT, CAST ALUMINUM FOOT PEDALS.

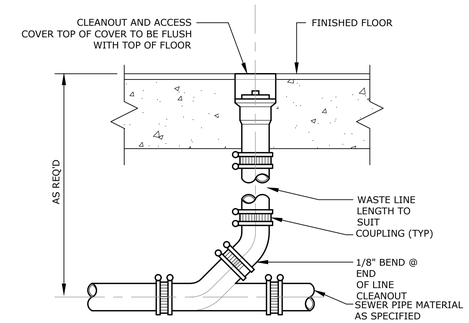

A / P002 FLOOR CLEAN OUT

NTS

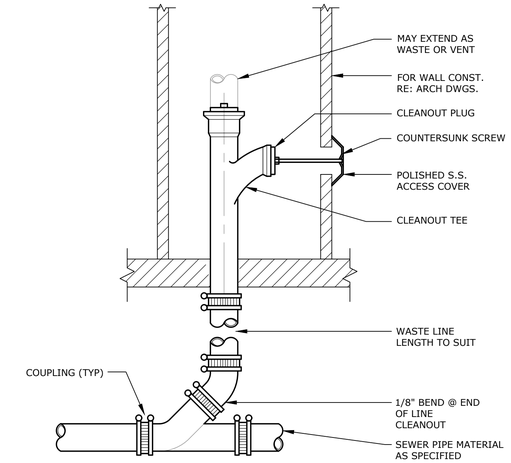

B / P002 WALL CLEANOUT

NTS

IMEG
370 E. WINDMILL LANE
SUITE 100, LAS VEGAS, NV
89123
PH: 702.896.1100
www.imegcorp.com
IMEG #23002690.00

PROFESSIONAL ENGINEER - STATE OF NEVADA
DUSTIN T. HART
Exp: 6/30/2025
No. 24362
JUL 31 2023

IZ design studio
design...sustainability...architecture.
7229 W. Sahara Ave Suite 100
Las Vegas, NV 89117
Nevada
tel. 702.441.0026
Fax. 702.475.4755
www.izdesignstudio.com

SCHEDULES AND DIAGRAMS

SNHD

SNHD BEHAVIORAL HEALTH 2

278 S. DECATUR BLVD
LAS VEGAS, NV 89107

DELTA NO.	REVISION NO.	DESCRIPTION	DATE

Sheet Name

Project Name

Project Number	21479
Date	06.16.2023
Drawn By	IMEG
Checked By	PE

P002

DEMOLITION NOTES:

1. EQUIPMENT AND PIPING LOCATIONS SHOWN FROM BEST AVAILABLE INFORMATION. CONTRACTOR SHALL FIELD VERIFY SIZES AND LOCATIONS.
2. EQUIPMENT THAT IS BEING REMOVED SHALL BECOME THE PROPERTY OF THE CONTRACTOR AND SHALL BE REMOVED FROM THE JOB SITE, EXCEPT EQUIPMENT SELECTED BY OWNER. OWNER SELECTED EQUIPMENT WILL BE TAGGED AND SHALL BE MOVED BY CONTRACTOR TO OWNER'S STORAGE ON SITE.
3. WHERE PIPING OR DUCTWORK IS TO BE CUT OFF AT A POINT, IT SHALL BE CAPPED OR BLANKED OFF AT THAT POINT. INSULATION ON REMAINING PIPE OR DUCT TO BE REPAIRED TO NEW CONDITION.
4. PIPING CONNECTED TO EQUIPMENT THAT IS BEING REMOVED SHALL BE CUT AND CAPPED IN WALLS, FLOORS OR CEILING SO AS NOT TO INTERFERE WITH NEW CONSTRUCTION OR EQUIPMENT.

SHEET NOTES:

1

EXISTING GREASE INTERCEPTOR TO BE DISCONNECTED FROM PLUMBING SYSTEMS, FILLED, AND ABANDONED IN PLACE PER UPC SECTION 1011.4 AND 722.0:

A. ALL ABANDONED SEWER LINES SHALL BE PLUGGED OR CAPPED IN AN APPROVED MANNER WITHIN 5 FT OF THE PROPERTY LINE.

B. ABANDONED TANKS SHALL HAVE ALL SEWAGE REMOVED AND BE COMPLETELY FILLED WITH EARTH, SAND, GRAVEL, CONCRETE, OR OTHER APPROVED MATERIAL.

FIELD VERIFY EXACT LOCATION AND REQUIREMENTS PRIOR TO COMMENCING WORK.

1

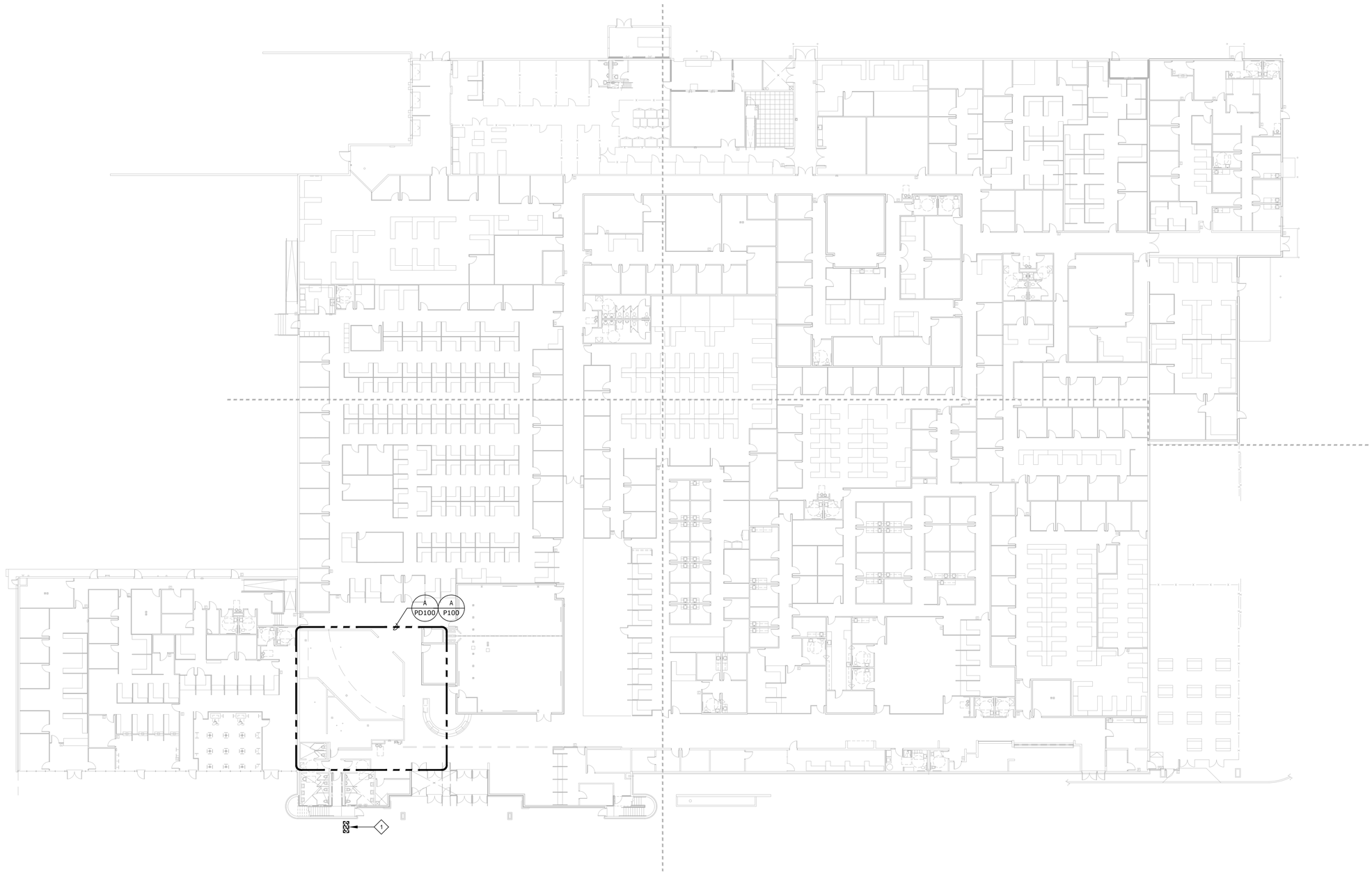

A
PS100

PLUMBING OVERALL PLAN

3/64" = 1'-0"

NORTH

IMEG
370 E. WINDMILL LANE
SUITE 100, LAS VEGAS, NV
89123
PH: 702.896.1100
www.imegcorp.com
IMEG #23002690.00

PROFESSIONAL ENGINEER - STATE OF NEVADA
DUSTIN T. HART
Exp: 6/30/2025
No. 24362

JUL 31 2023

IZ design studio
design...sustainability...architecture.
tel. 702.441.0026
Fax. 702.475.4755
www.izdesignstudio.com
7229 W. Sahara Ave Suite 100
Las Vegas, NV 89117
Nevada

PLUMBING OVERALL PLAN

SNHD

SNHD BEHAVIORAL HEALTH 2

278 S. DECATUR BLVD
LAS VEGAS, NV 89107

DELTA NO.	REVISION NO.	DESCRIPTION	DATE
1		CORRECTION#1	08.02.2023

Sheet Name

Project Name

Project Number	21479
Date	06.16.2023
Drawn By	IMEG
Checked By	PE

PS100

DEMOLITION NOTES:

1. EQUIPMENT AND PIPING LOCATIONS SHOWN FROM BEST AVAILABLE INFORMATION. CONTRACTOR SHALL FIELD VERIFY SIZES AND LOCATIONS.
2. EQUIPMENT THAT IS BEING REMOVED SHALL BECOME THE PROPERTY OF THE CONTRACTOR AND SHALL BE REMOVED FROM THE JOB SITE, EXCEPT EQUIPMENT SELECTED BY OWNER. OWNER SELECTED EQUIPMENT WILL BE TAGGED AND SHALL BE MOVED BY CONTRACTOR TO OWNER'S STORAGE ON SITE.
3. WHERE PIPING OR DUCTWORK IS TO BE CUT OFF AT A POINT, IT SHALL BE CAPPED OR BLANKED OFF AT THAT POINT. INSULATION ON REMAINING PIPE OR DUCT TO BE REPAIRED TO NEW CONDITION.
4. PIPING CONNECTED TO EQUIPMENT THAT IS BEING REMOVED SHALL BE CUT AND CAPPED IN WALLS, FLOORS OR CEILING SO AS NOT TO INTERFERE WITH NEW CONSTRUCTION OR EQUIPMENT.

SHEET NOTES:

1. REMOVE ALL PLUMBING FIXTURES AND ASSOCIATED APPURTENANCES WITHIN AREA OF WORK. REMOVE SANITARY AND/OR GREASE WASTE PIPING BACK TO BELOW GRADE AND CAP/ABANDON IN PLACE. REMOVE VENT PIPING BACK TO NEAREST MAIN AND CAP/ABANDON ABOVE CEILING. REMOVE DOMESTIC HOT WATER, COLD WATER, AND HOT WATER RETURN PIPING AND ASSOCIATED APPURTENANCES BACK TO NEAREST MAINS AND VALVE/CAP/ABANDON ABOVE CEILING. REMOVE WALK-IN COOLER(S) AND ASSOCIATED CONDENSATE LINES. FIELD VERIFY EXACT REQUIREMENTS PRIOR TO COMMENCING WORK.
2. REMOVE EXISTING 2" CW AND 1" HW BACK TO POINT OF DISCONNECTION AS INDICATED AND CAP IN CEILING. FIELD VERIFY EXACT LOCATION AND SIZE PRIOR TO COMMENCING WORK.
3. PROVIDE NEW ISOLATION VALVES. FIELD VERIFY EXACT LOCATION, SIZE, AND REQUIREMENTS PRIOR TO COMMENCING WORK.

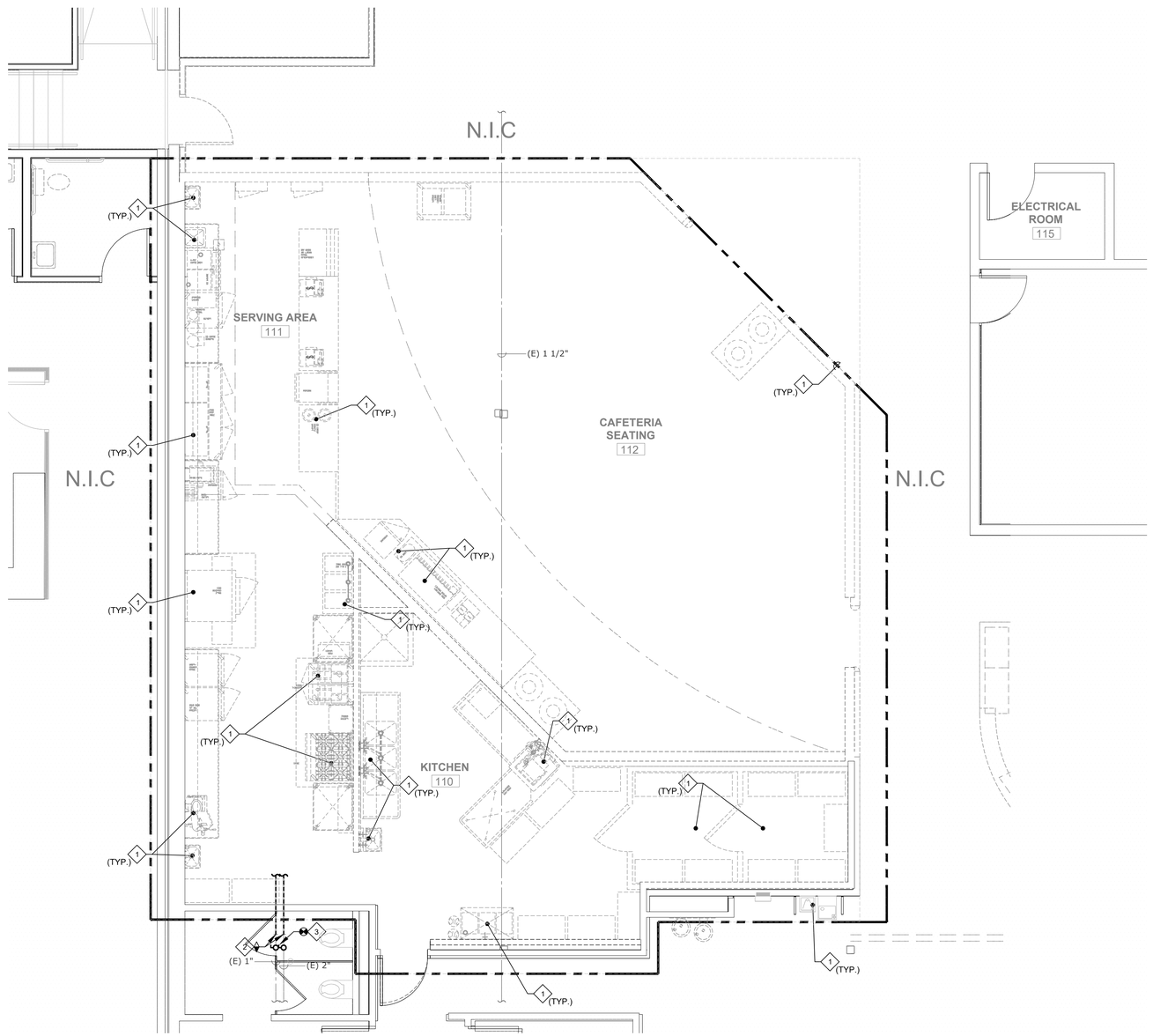

A
PD100

DEMOLITION PLUMBING PLAN
1/4" = 1'-0"

0' 1' 2' 4' 8'

NORTH

IMEG
370 E. WINDMILL LANE
SUITE 100, LAS VEGAS, NV
89123
PH: 702.896.1100
www.imegcorp.com
IMEG #23002690.00

PROFESSIONAL ENGINEER - STATE OF NEVADA
DUSTIN T. HART
Exp: 6/30/2025
No. 24362
JUL 31 2023

IZ design studio
design...sustainability...architecture.
tel. 702.441.0026
Fax. 702.475.4755
www.izdesignstudio.com
7229 W. Sahara Ave Suite 100
Las Vegas, NV 89117
Nevada

Sheet Name: DEMOLITION PLUMBING PLAN

Project Name: SNHD BEHAVIORAL HEALTH 2
278 S. DECATUR BLVD
LAS VEGAS, NV 89107

DELTA NO.	REVISION NO.	DESCRIPTION	DATE

Project Number	21479
Date	06.16.2023
Drawn By	IMEG
Checked By	PE

PD100

GENERAL NOTES:

1. ALL WATER PIPING SHALL BE INSTALLED ON THE INTERIOR SIDE OF THE BUILDING.
2. THE CUTTING, NOTCHING AND BORING OF HOLES IN FLOOR JOIST AND WALL STUDS SHALL BE IN ACCORDANCE WITH THE LATEST APPROVED EDITION OF THE INTERNATIONAL BUILDING CODE.
3. CONTRACTOR SHALL BE RESPONSIBLE FOR THE COORDINATION OF ALL PLUMBING ROUGH-IN LOCATIONS. REFER TO ARCHITECTURAL DRAWINGS FOR FIXTURES AND EQUIPMENT LOCATIONS.
4. CONTRACTOR SHALL BE RESPONSIBLE FOR ALL CUTTING AND PATCHING AS REQUIRED TO ACCOMMODATE THE WORK.
5. PLUMBING CONTRACTOR SHALL COORDINATE ROUTING OF PIPING WITH ALL OTHER TRADES PRIOR TO COMMENCING WORK.
6. ALL PLUMBING FIXTURES SHALL BE WATER CONSERVATION TYPE AS MANDATED BY LOCAL BUILDING DEPARTMENT.
7. ALL WATER CLOSETS DESIGNATED AS ACCESSIBLE SHALL BE INSTALLED SUCH THAT THE ACTUATOR IS OPERABLE FROM THE WIDE SIDE OF THE WATER CLOSET.
8. PRIOR TO INSTALLATION OF SEWER AND WATER PIPING BELOW GRADE COORDINATE EXACT LOCATIONS AND DEPTHS OF BURIAL WITH CIVIL AND FOUNDATION DRAWINGS AND CORRESPONDING ENGINEERS.
9. REFER TO THE PLUMBING DIAGRAMS THAT APPLY TO THE WORK ON THIS DRAWING. THESE DIAGRAMS PROVIDE GUIDANCE AS TO INSTALLATION INTENT AND DO NOT NECESSARILY SHOW ALL COMPONENTS REQUIRED.

SHEET NOTES:

1. CONNECT NEW 3/4" CW. HW TO EXISTING CW/HW STUBS. FIELD VERIFY EXACT SIZE AND LOCATION PRIOR TO COMMENCING WORK.
2. ROUTE 3/4" CW/HW DOWN IN WALL TO SINK.
3. 2" WASTE AND VENT IN WALL.
4. EXTEND NEW 2" WASTE BELOW GRADE AND 2" VENT ABOVE CEILING TO NEAREST EXISTING 2" WASTE AND VENT MAINS. FIELD VERIFY EXACT SIZE, LOCATION, ROUTING, INVERT ELEVATIONS, AND OTHER REQUIREMENTS PRIOR TO COMMENCING WORK.
5. PROVIDE NEW LINE-SIZE ISOLATION VALVE IN MAIN WATER LINE. FIELD VERIFY EXACT LOCATION.

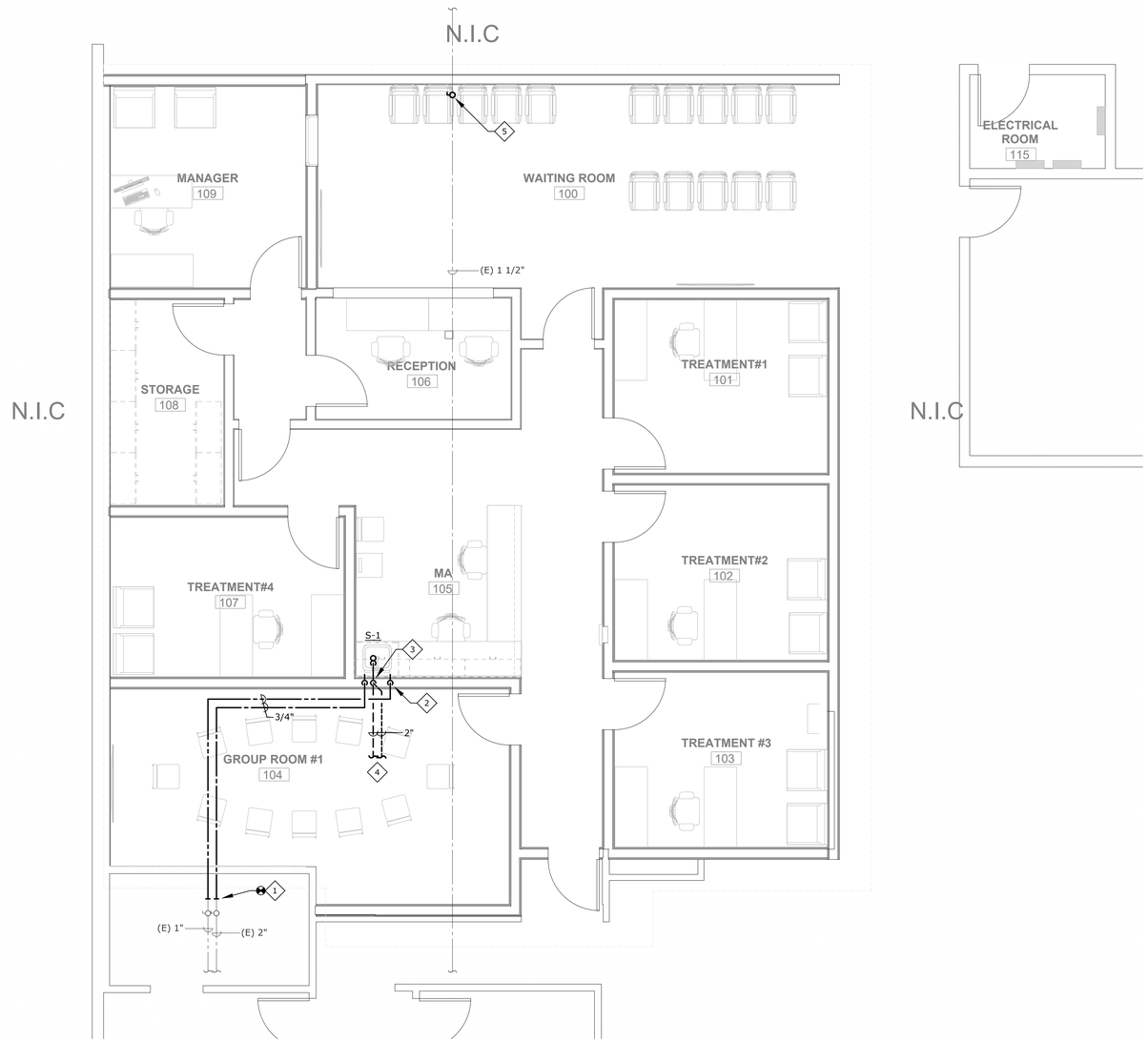

A
P100
PLUMBING PLAN
1/4" = 1'-0"

0' 1' 2' 4' 8'

NORTH

IMEG
370 E. WINDMILL LANE
SUITE 100, LAS VEGAS, NV
89123
PH: 702.896.1100
www.imegcorp.com
IMEG #23002690.00

PROFESSIONAL ENGINEER - STATE OF NEVADA
DUSTIN T. HART
Exp: 6/30/2025
No. 24362
JUL 31 2023

IZ design studio
design...sustainability...architecture.
tel. 702.441.0026
Fax. 702.475.4755
www.izdesignstudio.com
7229 W. Sahara Ave Suite 100
Las Vegas, NV 89117
Nevada

PLUMBING PLAN
SNHD
SNHD BEHAVIORAL HEALTH 2
278 S. DECATUR BLVD
LAS VEGAS, NV 89107

Sheet Name
Project Name

DATE
DESCRIPTION
REVISION NO.
DELTA NO.

Project Number 21479
Date 06.16.2023
Drawn By IMEG
Checked By PE

P100

ELECTRICAL SYMBOL LIST

NOTE: THIS IS A MASTER SCHEDULE. NOT ALL SYMBOLS AND/OR ABBREVIATIONS CONTAINED HEREIN MAY APPEAR ON THE DRAWINGS.
SHEETS AND/OR DESCRIPTIONS IN THESE PLANS AND DIAGRAMS SHALL SUPERSEDE THIS SYMBOL LIST (SYMBOL DEFINITION, FUNCTION, MOUNTING HEIGHTS, ETC. MOUNTING HEIGHTS SHALL BE TO CENTER OF THE BOX U.O.N)

ABBREVIATIONS

A, AMPS	AMPERES
AL	ALUMINUM
AFF	ABOVE FINISHED FLOOR
AFG	ABOVE FINISHED GRADE
AFCI	ARC FAULT INTERRUPTER DEVICE
AIC	AMPERE INTERRUPTION CAPACITY
ATS	AUTOMATIC TRANSFER SWITCH
BKBD	BACKBOARD
C, C.	CONDUIT (W/ PULL CORD IF OTHERWISE EMPTY)
CU	COPPER
DIA.	DIAMETER
DIST	DISTRIBUTION
DH,H	DAYLIGHT HARVESTING
DMR	DIMMER
EVSE	ELECTRIC VEHICLE SUPPLY EQUIPMENT
(E)	EXISTING TO REMAIN
F	FUSE (DUAL-ELEMENT, TIME DELAY UON)
(F)	FUTURE
FBO	FURNISHED BY OTHERS
FF&E	FIXTURES, FURNISHINGS & EQUIPMENT
FPEN	FUSE PER EQUIPMENT NAMEPLATE
GFCI	GROUND FAULT CIRCUIT INTERRUPTER DEVICE
G, GND	GROUND
HOA	HAND-OFF-AUTOMATIC
HP	HORSEPOWER
ID	INSIDE DIMENSION
IG	ISOLATED GROUND
K	KCMIL (EXAMPLES 300 KCMIL = 300K)
LCP	LIGHTING CONTROL PANEL
(N)	NEW
NF	NON-FUSED
NIC	NOT IN CONTRACT
NL	NIGHT LIGHT
NTS	NOT TO SCALE
OD	OUTSIDE DIMENSION
P	POLES
P-, PNL	PANEL
PH	PHASE
(R)	EXISTING - RELOCATE
RCP	ROOM CONTROL PANEL
REQD	REQUIRED
RGS	RIGID GALVANIZED STEEL
SPD	SURGE PROTECTIVE DEVICE (AKA TVSS)
SVC	SERVICE
SWBD	SWITCHBOARD
TVSS	TRANSIENT VOLTAGE SURGE SUPPRESSION (AKA SPD)
UNSW	UNSWITCHED
UPS	UNINTERRUPTIBLE POWER SUPPLY
UON	UNLESS OTHERWISE NOTED
W	WIRES
WP	WEATHERPROOF (NEMA 3R)
(X)	EXISTING - REMOVE
T-, XFMR	TRANSFORMER
30/3	AMPS/POLES REPRESENTATION (EXAMPLE: 30/3=30A,3P)

ELECTRICAL TAGS

- SHEET NOTE DESIGNATION
- 1002 — FEEDER DESIGNATION
- FB** — FLOORBOX / POKE-THROUGH DESIGNATION (SEE FLOORBOX / POKE-THROUGH SCHEDULE)
- PB** — PULLBOX DESIGNATION (SEE PULLBOX SCHEDULE)
- T15 , T300 — TRANSFORMER DESIGNATION (SEE TRANSFORMER SCHEDULE)
- FC — MECHANICAL EQUIPMENT DESIGNATION
- CONNECTED: KVA (A) / DEMAND: KVA (A) / ESTIMATED: KVA (A) — DISTRIBUTION EQUIPMENT LOAD SUMMARY

LIGHT FIXTURES

- LIGHT FIXTURE - CEILING SURFACE MOUNTED. (DRAWN TO APPROXIMATE SHAPE AND SCALE OR ENLARGED FOR CLARITY)
- LIGHT FIXTURE - CEILING RECESSED MOUNTED. (DRAWN TO APPROXIMATE SHAPE AND SCALE OR ENLARGED FOR CLARITY)
- LIGHT FIXTURE - PENDANT, CHAIN, STEM OR CABLE SUSPENDED. (DRAWN TO APPROXIMATE SHAPE AND SCALE OR ENLARGED FOR CLARITY)
- LINEAR WALL BRACKET
- WALL SCONCE
- STEP LIGHT
- STRIP LIGHT FIXTURE - SURFACE MOUNTED
- STRIP LIGHT FIXTURE - PENDANT, CHAIN, STEM OR CABLE SUSPENDED
- STRIP LIGHT FIXTURE - WALL MOUNTED
- CONTINUOUS LIGHT FIXTURE ASSEMBLY - TAPE, NARROW CHANNEL, TUBE, ETC.

(LENGTH AS INDICATED)

- TRACK LIGHT SYSTEM (SHOWN W/ END FEED). NUMBER OF HEADS AS INDICATED ON PLANS.
- CHANDELIER (PROVIDE 5X STRUCTURAL BACKING)
- DECORATIVE WALL SCONCE
- POLE OR POST - ARM MOUNTED LUMINAIRE
- POLE OR POST - TOP MOUNTED LUMINAIRE
- BOLLARD LUMINAIRE - ROUND OR SQUARE
- EXIT SIGNS - FACES (FILLED IN), ARROWS, AND MOUNTING AS INDICATED ON PLANS
- EMERGENCY LIGHTING UNIT - CEILING SURFACE OR RECESSED MOUNTED PER SCHEDULE
- EMERGENCY LIGHTING UNIT - WALL MOUNTED. LOCATE 12" BELOW CEILING UON. (10' MAX. UON)

LIGHT FIXTURES TAGS AND MODIFIERS

- WALL-WASH OR ACCENT.
- FIXTURE AND/OR EQUIPMENT ON EMERGENCY POWER.
- A 1a — A - LIGHT FIXTURE TYPE, SEE SCHEDULE; 1 - NUMBER INDICATES CIRCUIT NUMBER; a - LOWER-CASE LETTER INDICATES SWITCH LEG
- A 1 z1 — z1 - LOWER-CASE "z" W/ NUMBER INDICATES CONTROL ZONE.

SWITCHES @ +46" UON (DECORA STYLE UON)

- S — SWITCH - SINGLE POLE
- S2 — SWITCH - TWO POLE
- S3 — SWITCH - THREE-WAY
- S4 — SWITCH - FOUR-WAY
- SX — SWITCH - EMERGENCY (W/VOLTAGE BARRIER FROM NORMAL POWER DEVICES)
- SP — SWITCH - PILOT LIGHT (CONFIRM LIT POSITION)
- SK — SWITCH - KEY OPERATED
- SC — SWITCH - MOMENTARY CONTACT: SPDT CENTER OFF UON
- SM — MANUAL MOTOR STARTER: POLES AS INDICATED, HEATERS AS REQD.
- ST — COUNTDOWN TIMER SWITCH: DURATION AS INDICATED
- D — DIMMER SWITCH - SLIDER TYPE: 600W UON - MATCH FIXTURE CONTROL REQUIREMENTS (0-10V OR ELV UON) NOTE: 0-10V REQUIRES 2/C #18 STRANDED SHIELDED CONTROL WIRE. RUN SEPARATE FROM POWER WIRING.
- PE — PHOTOCELL SWITCH: 1500W, WP W/ ADJUSTABLE LIGHT GATE UON

OCCUPANCY / VACANCY SWITCHES @ +46" UON
NOTE: (ALL DUAL-TECHNOLOGY WITH INTEGRAL OR ADJACENT POWER PACK)

- M — SWITCH - SPST
- M — SWITCH - SPST CEILING MOUNTED
- M2 — SWITCH - DPDT 2-CHANNEL HI-LOW CONTROL
- MD — SWITCH - SPST DIMMER 0-10V OR W/ 10V-ELV POWER PACK ADAPTER
- MP — SWITCH - SPST W/ AMBIENT LIGHT SENSOR (DAYLIGHT HARVESTING)
- M2P — SWITCH - DPDT W/ AMBIENT LIGHT SENSOR
- MDP — SWITCH - SPST DIMMER W/ AMBIENT LIGHT SENSOR 0-10V OR W/ 10V-ELV POWER PACK ADAPTER
- PE — LOCAL-ONLY PHOTOCELL W/ INTEGRAL DIMMER (0-10V OR ELV W/ POWER PACK ADAPTER AS REQD)

(ADJUSTABLE PICKUP LEVEL FOR DAYLIGHT HARVESTING)

LIGHTING CONTROL SYSTEM - DEVICES @ +46" UON

- MS — MASTER LIGHTING CONTROL STATION
- OV — SYSTEM OCCUPANCY/VACANCY SENSOR
- RCP# — ROOM CONTROLLER PANEL
- SYSTEM LIGHTING CONTROL STATION
- PS — SYSTEM PHOTOCELL SENSOR - CEILING UON

EQUIPMENT, CONTROLS & CONNECTIONS

- SWITCHBOARD / SWITCHGEAR
- PANELBOARD - FLUSH, SURFACE
- TRANSFORMER
- GROUNDING BUS BAR
- VFD — VARIABLE FREQUENCY DRIVE
- B — ENCLOSED CIRCUIT BREAKER
- F N — DISCONNECT SWITCH: 30/3 UON. F=FUSED (FPEN), N=NONFUSED
- RELAY
- CONTACTOR W/ INTEGRAL HOA SELECTOR
- MOTOR STARTER W/ INTEGRAL CONTROL TRANSFORMER, PILOT LIGHT & HOA SELECTOR
- COMBINATION STARTER & FUSIBLE DISCONNECT, 30/3, SIZE 1 UON
- SINGLE-PHASE MOTOR CONTROL ASSEMBLY: HP-RATED SWITCH AND POWER RELAY - 20/1 UON
- J — JUNCTION BOX - SIZE PER NEC REQUIREMENTS
- PB** — PULLBOX - SIZE AND LOCATION AS SCHEDULED (OTHERWISE AS REQUIRED BY CODE)
- CONTROL STATION - FUNCTION AS INDICATED, +46" UON
- SHUNT TRIP STATION - +72" AFF UON
- MOTOR
- SIGN — SIGN OUTLET
- EQUIPMENT PACKAGE - TYPE AS INDICATED
- CEILING FAN OUTLET (PROVIDE 5X STRUCTURAL BACKING)

SPECIALTY EQUIPMENT

- DOUBLE EV / SINGLE EV — ELECTRIC VEHICLE EVSE CHARGING STATION, LEVEL 2 UON, PEDESTAL MOUNT UON
- EV EV — SAME AS ABOVE EXCEPT WALL MOUNT - ADA-COMPLIANT MOUNTING.
- COMBINATION INTERCONNECTABLE SMOKE/CO DETECTOR W/INTEGRAL HORN, STROBE & BACK-UP BATTERY.

FEEDERS AND CIRCUITING

- ABOVE FLOOR OR GRADE — P — PRIMARY
- BELOW FLOOR OR GRADE — S — SECONDARY
- TURN UP — C — COMMUNICATIONS
- TURN DOWN — SERVICE GROUND POINT
- STUB OUT & CAP — SO — SEAL-OFF FITTING
- TICS = NUMBER OF CIRCUIT WIRES IF MORE THAN TWO (= ISOLATED OR REDUNDANT GROUND WIRE)
- A-1,3,5 — HOMERUN: REPRESENTATION (EXAMPLE: 6#12 + 1#12 GROUND WIRE IN MIN. 3/4" C. UON TO PANEL 'A', CIRCUITS 1,3,5)

POWER RECEPTACLES @ +18" UON (DECORA STYLE UON)

CLG. OR CASEWORK WALL

- DUPLEX
- DUPLEX - INTEGRAL GFCI CIRCUITRY
- DUPLEX - HALF SWITCHED WITH "CONTROLLED" TEXT OR "⏻" SYMBOL ENGRAVING ON RECEPTACLE FACE
- DUPLEX - DOUBLE
- DUPLEX - DOUBLE W/ INTEGRAL GFCI CIRCUITRY
- DUPLEX - ISOLATED GROUND (ORANGE FACE) NEMA 5-20R/IG
- DUPLEX - WITH DUAL 200mA USB CHARGING PORTS
- H H — DUPLEX - HOSPITAL GRADE (GREEN DOT) NEMA 5-20R/HG
- H — RECEPTACLE - SINGLE REGRESSED (CLOCK STYLE) HEIGHT AS INDICATED
- RECEPTACLE - SPECIAL (RATING AS INDICATED)
- A A — RECEPTACLE - 30A. 125/250V. NEMA 14-30R (CLOTHES DRYER TYPE)
- B B — RECEPTACLE - 50A. 125/250V. NEMA 14-50R (DOMESTIC RANGE TYPE)
- C C — RECEPTACLE - 30A. 125/250V. NEMA L14-30R (TWIST LOCK TYPE)
- TP — TELE-POWER POLE (+ ▽ UON)
- SURFACE RACEWAY SYSTEM

RECEPTACLES & OUTLETS - MOUNTING AND ASSEMBLIES

- DEVICE MOUNTED IN OR ABOVE COUNTER BACKSPLASH MAX HEIGHT TO BE +46" UON (PER ADA)
- S — DEVICES MOUNTED IN MULTIPLE UNDER COMMON COVERPLATE. MAX HEIGHT TO BE +46" UON (PER ADA)

FLOOR BOXES
NOTE: BASIC BOXES ARE SHOWN: ROUND PLASTIC BOX, IN CONCRETE SLAB, DECORA-STYLE DEVICES, FLUSH FLIP-LID OUTLET COVERS, FLANGED UNIVERSAL COVER PLATE (COLOR AS DIRECTED BY ARCHITECT)

- DUPLEX (DOUBLE-DUPLEX): HUBBELL #S1PFB-S1SP SERIES UON
- VOICE / DATA OUTLET (2 PORTS) - W/ 1" LOW VOLTAGE CONDUIT TO ACCESSIBLE ATTIC. HUBBELL #S1PFB-S1SP SERIES UON
- COMBINATION DUPLEX +2 PORT VOICE / DATA - W 1" LOW VOLTAGE CONDUIT TO ACCESSIBLE ATTIC HUBBELL #S1PFB-S1SP-SL21M SERIES UON
- FB** FB — SPECIAL PURPOSE FLOOR BOX - TYPE AS SCHEDULED

LOW VOLTAGE SYSTEMS OUTLETS @ +18" UON
NOTE: THESE SYMBOLS ARE FOR OUTLETS OF GENERIC INSTALLATIONS. W/O FORMAL LOW VOLTAGE SYSTEMS DESIGN. IF COMMUNICATIONS/ITS SYSTEM DESIGN IS ISSUED FOR THIS PROJECT, THOSE SYMBOL'S AND REQUIREMENTS SHALL GOVERN.

CLG. OR CASEWORK WALL

- COMMUNICATION (VOICE/DATA) OUTLET (4-11/16" X 2-1/8" BOX W/ 1"C. TO ACCESSIBLE ATTIC UON)
- HC HP — HIGH CAPACITY COMMUNICATION (VOICE/DATA) OUTLET (5" SQUARE X 3" BOX W/ 1-1/4"C. TO ACCESSIBLE ATTIC UON)
- TELEVISION OUTLET (4-11/16" X 2-1/8" BOX W/ 1"C. TO ACCESSIBLE ATTIC UON)
- COMBINATION TV OUTLET (COAX + DATA) (5" SQUARE X 3" BOX W/ 1-1/4"C. TO ACCESSIBLE ATTIC UON)
- M — MICROPHONE OUTLET (4-11/16" X 2-1/8" BOX W/ 1"C. TO ACCESSIBLE ATTIC UON)
- VC — VOLUME CONTROL OUTLET (4-11/16" X 2-1/8" BOX W/ 1"C. TO ACCESSIBLE ATTIC UON)
- S — SPEAKER OUTLET INSTALL BACK BOX (FURNISHED BY OTHERS UON)

ACCESS CONTROL OUTLETS
NOTE: THESE SYMBOLS ARE FOR OUTLETS OF GENERIC INSTALLATIONS. W/O FORMAL ACCESS CONTROL DESIGN. IF ACCESS CONTROL DESIGN IS ISSUED IS ISSUED FOR THIS PROJECT, THOSE SYMBOLS AND REQUIREMENTS SHALL GOVERN.

CLG. OR CASEWORK WALL

- AC — INITIATING DEVICE OUTLET @ +46" UON (KEYPAD, CARD SWIPE, REQUEST-TO-EXIT, MOTION SENSOR, ETC.)
- AC — ACTUATION DEVICE IN OR NEAR DOOR FRAME UON (STRIKE, LATCH, ELECTROMAGNET, MOTOR, ETC.)

DRAWING INDEX

PROFESSIONAL ENGINEER - STATE OF NEVADA
DAVID MEADOR
Exp. 12/31/2023
ELECTRICAL
No. 010319

JULY 31 2023

IZ design studio
design . . sustainability . . architecture.
7229 W. Sahara Ave Suite 100
Las Vegas, NV 89117
Nevada
tel. 702.441.0026
Fax. 702.475.4755
www.izdesignstudio.com

SYMBOL LIST
SNHD
SNHD BEHAVIORAL HEALTH 2
278 S. DECATUR BLVD
LAS VEGAS, NV 89107

DELTA NO.	REVISION NO.	DESCRIPTION	DATE
1		CORRECTION#1	08.02.2023

Sheet Name
Project Name

Project Number	21479
Date	06.16.2023
Drawn By	IMEG
Checked By	PE

E000

IMEG
370 E. WINDMILL LANE
SUITE 100, LAS VEGAS, NV
89123
PH: 702.896.1100
www.imegcorp.com
IMEG #23002690.00

ELECTRICAL SPECIFICATIONS

PART ONE - GENERAL

1.1. THE WORK: ALL WORK SHALL BE NEW UNLESS OTHERWISE NOTED. THE CONTRACTOR SHALL PROVIDE THE WORK SHOWN ON THE DRAWINGS AND SPECIFIED FOR ITS INDIVIDUAL SECTIONS OF WORK. THE WORD "WORK" IS DEFINED AS ALL LABOR, TRANSPORTATION, MATERIAL, EQUIPMENT, TOOLS, INSTALLATION, SUPERVISION AND ANY OTHER INCIDENTAL ITEMS OR SERVICES NECESSARY FOR THE PROPER INSTALLATION AND OPERATION OF THE COMPLETE SYSTEMS, WHICH SHALL BE PROVIDED BY THIS CONTRACTOR WHETHER OR NOT SPECIFICALLY INDICATED OR NOTED.

1.2. RESPONSIBILITY: THIS CONTRACTOR IS SOLELY RESPONSIBLE FOR THE ACTIONS OF ITS PERSONNEL, SUPPLIERS, AND SUB-CONTRACTORS. THIS CONTRACTOR SHALL BE RESPONSIBLE FOR THE PERFORMANCE OF ALL WORK AS MAY BE REQUIRED TO ACCOMMODATE OR SUPPORT THE ELECTRICAL WORK. EXAMPLES: PAINTING, STRUCTURAL SUPPORTS, CUTTING AND PATCHING, EXCAVATION AND BACKFILL, CONCRETE PADS, ROOF JACKS, ETC. REQUIRING THIS CONTRACTOR'S ENGAGEMENT OF APPROPRIATE TRADES TO PERFORM SUCH WORK FOR THE PROPER INSTALLATION AND OPERATION OF COMPLETE ELECTRICAL SYSTEMS.

1.3. MINIMUM REQUIREMENTS: THESE SPECIFICATIONS ESTABLISH THE MINIMUM REQUIREMENTS FOR THE WORK AND MATERIALS, EQUIPMENT AND METHODS TO BE PROVIDED. THE DRAWINGS MAY INDICATE REQUIREMENTS WHICH EXCEED THESE MINIMUMS.

1.4. GENERAL CONDITIONS: ALL GENERAL CONDITIONS, SPECIAL REQUIREMENTS OR GENERAL REQUIREMENTS OF THE CONSTRUCTION SPECIFICATIONS ARE MADE PART OF THIS SPECIFICATION AND HAVE THE SAME FORCE AND EFFECT AS IF COMPLETELY REPRODUCED.

1.5. DEFINITIONS:

AHJ:	AUTHORITY HAVING JURISDICTION.
ASSEMBLY:	AN INSTALLATION OR SYSTEM OF MULTIPLE COMPONENTS REQUIRING MULTIPLE CONNECTIONS. (EXAMPLES: TRASH COMPACTOR, MOTORIZED DOOR, HVAC SPLIT SYSTEM, ETC.).
EQUAL:	ACCEPTED BY THE ENGINEER AS EQUAL.
FF&E:	FURNISHINGS, FIXTURES AND EQUIPMENT - PROVIDED BY OTHERS AT JOBSITE. RECEIVE, PROTECT, STORE, ASSEMBLE, INSTALL AND CONNECT. PROVIDE MINIMUM 5x STRUCTURAL BACKING. (EXAMPLES: CHANDELIERS, PROJECTORS, ETC.).
PROVIDE:	FURNISH, INSTALL, ACTIVATE, AND COMMISSION.

1.6. CODES: ALL WORK SHALL BE DONE IN ACCORDANCE WITH THE LATEST ADOPTED EDITIONS OF THE NATIONAL ELECTRICAL CODE (NEC) AND ALL OTHER APPLICABLE FEDERAL, STATE, AND LOCAL REGULATIONS.

1.7. PERMITS: PAY ALL FEES AND OBTAIN ALL PERMITS AND INSPECTIONS REQUIRED FOR THE WORK.

1.8. DRAWINGS: DRAWINGS ARE DIAGRAMMATIC AND SCHEMATIC IN NATURE, AND INDICATE THE TYPE, SIZE, ARRANGEMENT AND LOCATIONS OF MATERIALS AND EQUIPMENT. WORK INCLUDES CERTAIN COMPONENTS, APPURTENANCES, AND RELATED SPECIALTIES THAT MAY NOT BE SHOWN. PROVIDE ALL NECESSARY ITEMS TO COMPLETE THE WORK ACCORDING TO INDUSTRY STANDARDS. IT IS THE INTENT OF THE DRAWINGS AND SPECIFICATIONS TO REQUIRE FINISHED WORK, TESTED AND READY FOR OPERATION. DO NOT SCALE DRAWINGS. ARRANGEMENT OF EQUIPMENT AND ROUTING OF FEEDERS AND BRANCH CIRCUITING SHALL BE PLUMB AND AT RIGHT ANGLES TO BUILDING CONSTRUCTION, AND MAY REQUIRE MODIFICATION DUE TO UNFORESEEN CONDITIONS REQUIRING ONSITE REVISIONS DURING CONSTRUCTION. (SEE ALSO "BIDDING").

1.9. COORDINATION: THIS PROJECT REQUIRES A HIGH LEVEL OF COORDINATION AND COOPERATION WITH OWNER, ARCHITECT, OTHER TRADES, VENDORS, AND SPECIALTY CONTRACTORS. CAREFULLY EXAMINE ALL CONTRACT DOCUMENTS INCLUDING, BUT NOT LIMITED TO, SHOP DRAWINGS, ETC. FOR ALL GENERAL CONSTRUCTION, STRUCTURAL, MECHANICAL, PLUMBING, ELECTRICAL, AND SPECIALTY CONTRACTOR WORK. PRIOR TO ROUGH-IN, COORDINATE THE WORK WITH ALL OTHER TRADES, TAKING RESPONSIBILITY FOR THE PROPER FITTING OF MATERIAL INTO THE BUILDING AS PLANNED WITHOUT INTERFERENCE WITH OTHER WORK. ESTABLISH AND VERIFY LOCATIONS, HEIGHTS, CONNECTION METHODS, ETC. WITH EQUIPMENT INSTALLER (AND OWNER, ARCHITECT, AND/OR INTERIOR DESIGNER FOR FF&E ITEMS), AND MAKE REASONABLE MODIFICATIONS IN THE LAYOUTS NEEDED TO PREVENT CONFLICTS WITH OTHER TRADES IN ORDER TO PROVIDE ACCESS FOR THE PROPER EXECUTION OF THE WORK.

1.10. IDENTICAL: ALL WORK REQUIRED FOR IDENTICAL ITEMS AND ASSEMBLIES OF THE PROJECT SHALL BE PROVIDED, ALTHOUGH EACH SPECIFIC IDENTICAL ITEM MAY NOT BE SHOWN IN DETAIL.

1.11. VERIFICATION: CHECK AND VERIFY ALL SIZES, DIMENSIONS, AND CONDITIONS BEFORE STARTING ANY WORK. ANY DEVIATION(S) OR PROBLEM(S) SHALL BE TRANSMITTED TO THE ENGINEER FOR REVIEW.

1.12. CONNECTIONS: CONNECT ALL EQUIPMENT, SYSTEMS, AND ASSEMBLIES PROVIDED BY OTHERS INCLUDING CONTROLS, SAFETY DEVICES AND INTERCONNECTIONS. EXCEPTION: DO NOT INTERCONNECT THE CONTROL SYSTEMS OF THOSE MECHANICAL AND PLUMBING SYSTEMS WHICH ARE SPECIFICALLY NOTED TO BE THE RESPONSIBILITY OF THOSE TRADES. PROVIDE FUSIBLE DISCONNECT SWITCHES AND MOTOR STARTERS FOR ALL EQUIPMENT EXCEPT THOSE ITEMS WHICH ARE SPECIFICALLY LISTED WITH INTEGRAL STARTERS/DISCONNECT SWITCHES. WHERE STARTERS AND/OR DISCONNECT SWITCHES ARE FURNISHED TOGETHER WITH EQUIPMENT, RECEIVE, INSTALL, AND CONNECT THOSE ITEMS.

1.13. SUBMITTAL: SUBMIT TO THE ENGINEER COMPLETE ELECTRONIC SETS OF SHOP DRAWINGS AND TECHNICAL DATA SHEETS FOR ALL EQUIPMENT AND MATERIALS SPECIFIED HEREIN. THE ENGINEER SHALL REVIEW SHOP DRAWINGS AND TECHNICAL DATA SHEETS FOR CONFORMANCE WITH THE CONTRACT DOCUMENTS AND ISSUE A WRITTEN ASSESSMENT TO THE OWNER PRIOR TO COMMENCEMENT OF WORK. THE ENGINEER'S FAILURE TO CORRECT ERRORS IN THE SUBMITTAL SHALL NOT RELIEVE THE CONTRACTOR OF THE OBLIGATION TO PERFORM THE WORK AS SHOWN AND/OR SPECIFIED. THE CONTRACTOR SHALL BE RESPONSIBLE FOR ALL ENGINEERING FEES NECESSARY TO CHANGE PROJECT DOCUMENTS BASED ON ALTERNATE SUBMITTAL PACKAGES/EQUIPMENT SUBSTITUTIONS.

1.14. OR-EQUAL SUBSTITUTIONS: ALL PROPOSED "OR EQUAL" SUBSTITUTIONS SHALL BE SUBMITTED TO THE ENGINEER FOR CONSIDERATION PRIOR TO BIDDING AND AFTER ALL REQUIREMENTS ASSOCIATED WITH SUBSTITUTED EQUIPMENT AND/OR MATERIALS HAVE BEEN COORDINATED WITH OTHER BUILDING TRADES, INCLUDING ALL MECHANICAL, STRUCTURAL, AND/OR ARCHITECTURAL ELEMENTS. THE OWNER'S REPRESENTATIVE SHALL PRE-APPROVE ANY PROPOSED SUBSTITUTION IN WRITING. IDENTIFY AND ANNOTATE ALL REVISED REQUIREMENTS PER BUILDING TRADE ON THE SHOP DRAWINGS. ALSO IDENTIFY ALL COST DEBITS OR CREDITS IN WRITING FOR THE PROPOSED CHANGES PER BUILDING TRADE AND SUMMARIZE THESE AS A TOTAL NET-TO-OWNER CHARGE OR CREDIT FOR CONSIDERATION.

1.15. AS-BUILT: UPON COMPLETION OF CONSTRUCTION, SUPPLY THE ENGINEER WITH AS-BUILT DOCUMENTS ACCURATELY SHOWING THE MATERIALS AND EQUIPMENT AS INSTALLED. PROVIDE OPERATION AND MAINTENANCE MANUAL(S) CONTAINING APPROVED SHOP DRAWINGS, OPERATING AND MAINTENANCE INSTRUCTION FOR SWITCHGEAR, LIGHTING FIXTURES, CONTROLS, AND SPECIALTY EQUIPMENT.

1.16. GUARANTEE: ALL MATERIALS AND WORKMANSHIP SHALL BE GUARANTEED FOR A MINIMUM OF ONE (1) YEAR FROM DATE OF ACCEPTANCE BY OWNER (LONGER IF REQUIRED BY GENERAL AND/OR SPECIAL CONDITIONS). IN ADDITION, THE INSTALLATION SHALL BE GUARANTEED TO PERFORM AS SPECIFIED AND FULFILL EACH AND EVERY REQUIREMENT OF THE DRAWINGS AND SPECIFICATIONS WHEN OPERATED IN ACCORDANCE WITH THE CONTRACTOR'S INSTRUCTIONS. SHOULD THE INSTALLATION IN ANY WAY FAIL TO DO SO, THE CONTRACTOR WILL, WITHOUT DELAY AND WITHOUT COST TO THE OWNER, PROVIDE WHATEVER ADDITIONAL EQUIPMENT, MATERIAL, AND LABOR REQUIRED TO CORRECT THE DEFICIENCY AND COMPLY WITH THE REQUIREMENTS OF THE DRAWINGS AND SPECIFICATIONS. WHERE SPECIFIED EQUIPMENT HAS A LONGER GUARANTEE PERIOD, THE TERMS OF THAT GUARANTEE SHALL GOVERN (EXAMPLE: LED SYSTEM WITH 5 YEAR GUARANTEE). INCANDESCENT LAMPS ARE EXEMPT BUT SHALL BE NEW AND UNUSED AT THE TIME OF FINAL ACCEPTANCE.

1.17. IECC COMPLIANCE: COMPLY WITH ALL REQUIREMENTS SET FORTH IN THE IECC COMPLIANCE CERTIFICATE INCLUDED IN THESE DOCUMENTS. HIRE A COMMISSIONING AGENT TO COMPLY WITH AND PERFORM ALL ASPECTS OF SECTION C408 OF THE 2018 IECC.

BIDDING

1.18. SITE VISIT: CONTRACT DOCUMENTS INDICATE NEW WORK TO BE PERFORMED AND DO NOT PURPORT TO SHOW ALL EXISTING CONDITIONS. VISIT THE SITE PRIOR TO SUBMITTING A BID TO BECOME FAMILIAR WITH EXISTING CONDITIONS. COMPARE THE WORK SPECIFIED IN THE CONTRACT DOCUMENTS AGAINST EXISTING CONDITIONS, AND IDENTIFY AND ANNOTATE ALL WORK OR CONDITIONS THAT ARE DIFFERENT FROM THE CONTRACT DOCUMENTS OR THEIR INTENT. UPON DISCOVERY, IMMEDIATELY NOTIFY AND REPORT IN WRITING ANY DISCREPANCIES TO THE ENGINEER. NO EXTRAS OR CHANGE ORDERS WILL BE ALLOWED FOR FAILURE TO PERFORM THE PRE-BID SITE VISIT.

1.19. BASIS OF PROPOSAL: PROPOSAL SHALL BE BASED ON MANUFACTURERS AND MODELS AS LISTED UNLESS "OR EQUAL" IS INDICATED. PROVIDE SUBSTITUTION REQUESTS A MINIMUM OF FIVE (5) BUSINESS DAYS PRIOR TO BID DATE CLOSING TO ALLOW TIME FOR DUE CONSIDERATION OF PROPOSED ALTERNATE AND SUBSEQUENT NOTIFICATION TO ALL OTHER BIDDERS IN THE EVENT SUBSTITUTION IS DEEMED ACCEPTABLE. DETERMINATION OF SUBSTITUTION EQUALITY RESTS SOLELY WITH THE ENGINEER.

1.20. BIDDING: THE ARCHITECTURAL AND MECHANICAL CONTAIN DETAILED DESCRIPTIONS, CIRCUITING, AND CONNECTION REQUIREMENTS WHICH ARE PART OF THIS CONTRACTOR'S RESPONSIBILITIES. DO NOT SUBMIT BIDS ON THIS PROJECT PRIOR TO REVIEWING ALL PROJECT DRAWINGS, SPECIFICATIONS, AND ADDENDA.

1.21. SPECIFICATIONS BOOK: THE SPECIFICATIONS CONTAIN SIGNIFICANT INFORMATION, CONDITIONS, AND PROCEDURES WHICH MAY HAVE A SUBSTANTIAL IMPACT ON THIS CONTRACTOR'S COSTS. DO NOT SUBMIT A BID ON THIS PROJECT UNLESS THE SPECIFICATIONS HAVE BEEN THOROUGHLY REVIEWED. THE GENERAL NOTES CONTAINED HEREIN ARE COMPLIMENTARY TO THE SPECIFICATIONS BOOK, AND IN COMPARISON THE MORE STRINGENT REQUIREMENT(S) SHALL GOVERN.

PART TWO - PRODUCTS

2.1. MATCH EXISTING: EXISTING EQUIPMENT AND SYSTEMS SHALL BE CONSIDERED A MINIMUM STANDARD TO BE MET, IF NOT OTHERWISE EXCEEDED BY THESE PLANS AND SPECIFICATIONS. NEW MATERIALS AND EQUIPMENT SHALL MATCH EXISTING IN APPEARANCE AND FUNCTION.

2.2. EXISTING SWITCHGEAR: CHANGES TO EXISTING PANELBOARDS AND DISTRIBUTION EQUIPMENT SHALL BE MADE WITH MATCHING COMPONENTS. NEW CIRCUIT PROTECTIVE DEVICES SHALL BE MANUFACTURER-CERTIFIED AS COMPATIBLE WITH EXISTING EQUIPMENT, AND SHALL EQUAL OR EXCEED EQUIPMENT FAULT CURRENT (AIC) RATINGS.

2.3. EQUIPMENT STANDARDS: ALL MATERIALS AND EQUIPMENT SHALL BE NEW AND OF THE HIGHEST QUALITY AVAILABLE ("SPECIFICATION GRADE"). EQUIPMENT SHALL BE CONSTRUCTED TO NEMA STANDARDS AND SHALL BE LABELED FOR THEIR INTENDED PURPOSE BY A RECOGNIZED TESTING AGENCY ACCEPTABLE TO THE AHJ (U.L., CSA, ETL, ETC.).

2.4. ACCEPTABLE MANUFACTURERS AND SUPPLIERS: WHERE EQUIPMENT AND MATERIALS ARE NOT SPECIFIED BY NAME THEY ARE DEEMED TO GENERIC, SUBJECT TO THE REQUIREMENTS LISTED HEREIN. THESE MANUFACTURERS ARE CONSIDERED CAPABLE OF OFFERING EQUIVALENT PRODUCTS. MINIMUM STANDARD IN ALL INSTANCES IS COMMERCIAL GRADE:

SWITCHGEAR:	EATON, GENERAL ELECTRIC, SIEMENS, SQUARE D
LIGHT FIXTURES:	ACUITY, COOPER, HUBBELL, THOMAS
WIRING DEVICES:	HUBBELL, LEVITON, LEGRAND, WIREMOLD

2.5. CIRCUITING: ALL WIRING SHALL BE IN CONDUIT, CONCEALED EXCEPT WHERE NOTED. EMT WITH STEEL INSULATED THROAT SET SCREW FITTINGS MAY BE USED IN DRY, PROTECTED INTERIOR LOCATIONS. PVC SCHEDULE 40 SHALL BE USED BELOW GRADE AT MINIMUM -24". WRAPPED RIGID ELBOWS AND RISERS SHALL BE USED FOR ALL THROUGH-GRADE TRANSITIONS AND STUB-UPS. RGS OR IMC CONDUIT WITH THREADED FITTINGS SHALL BE USED IN ALL LOCATIONS WHERE EXPOSED TO THE ELEMENTS OR SUBJECT TO PHYSICAL DAMAGE. IMC OR RIGID CONDUIT BELOW GRADE SHALL BE HALF-LAP WRAPPED WITH 20 MIL PVC TAPE. TYPE ENT RACEWAY IS NOT ALLOWED. CONNECT RECESSED AND SUSPENDED LIGHTING FIXTURES, MOTORIZED AND/OR VIBRATING EQUIPMENT WITH STEEL FLEX OR SEALTITE CONDUIT. ALL CONDUIT SHALL HAVE PULL CORD IF OTHERWISE EMPTY.

2.6. MC CABLE: MC CABLE MAY BE USED IN LOCAL 1- AND 2-CIRCUIT APPLICATIONS ACCEPTABLE TO THE AHJ. HOMERUNS AND FEEDERS SHALL BE CONDUIT AND WIRE.

2.7. WIRING: ALL WIRE SHALL BE COPPER, STRANDED IN SIZES #8 AWG AND LARGER. INSULATION SHALL BE TYPE THWN OR THHN. SINGLE PHASE BRANCH CIRCUITS SHALL INCLUDE A SEPARATE NEUTRAL WIRE WITH EACH PHASE WIRE. NEUTRAL SHALL BE WHITE WITH COLOR STRIPE MATCHING COLOR OF PHASE WIRE.

2.8. FUSES AND CIRCUIT BREAKERS: FUSES AND CIRCUIT BREAKERS SHALL BE SIZED PER ACTUAL RESPECTIVE APPLICATION (i.e., MOTOR CIRCUIT PROTECTOR, GROUND FAULT CIRCUIT INTERRUPTER, ARC FAULT CIRCUIT INTERRUPTER, ETC.). FUSES SHALL BE DUAL ELEMENT, CURRENT-LIMITING, AND SHALL BE INTERCHANGEABLE BETWEEN FRAME SIZES WITH STANDARD FACTORY FUSE REDUCERS. PROVIDE LOCKABLE SPARE FUSE CABINET WITH (3) SPARE FUSES OF EACH SIZE USED.

2.9. DISTRIBUTION SWITCHGEAR: SWITCHGEAR SHALL HAVE COPPER BUS AND HEAVY GAUGE HOUSINGS. SWITCHGEAR IN LOCATIONS OTHER THAN LOCKED ELECTRIC ROOMS SHALL HAVE LOCKABLE COVERS. SWITCHGEAR SHALL HAVE NO LESS THAN 20% SPARE BUSSED AND USABLE SPACE, MEASURED AS A PERCENTAGE OF THE SPACE OCCUPIED BY SPECIFIED CIRCUIT BREAKERS, SWITCHES, ETC.

2.10. SERVICE SWITCHGEAR: IN ADDITION TO THE ABOVE, SERVICE SWITCHGEAR SHALL MEET THE REQUIREMENTS OF THE SERVING UTILITY.

2.11. PANELBOARDS: PANELS SHALL HAVE COPPER BUS AND HARDWARE, BOLT-ON CIRCUIT BREAKERS, FLUSH MONO-FLAT TRIM, PIANO HINGED DOORS AND COVER (DOOR-IN-DOOR) WITH LOCKABLE MASTER-KEYED FLUSH LATCHES. FLUSH-MOUNTED PANELS SHALL HAVE EMPTY CONDUITS STUBBED TO ACCESSIBLE ATTIC SPACE: (1) 3/4" CONDUIT FOR EACH THREE (3) SPARE/SPACE CIRCUITS.

2.12. SAFETY SWITCHES: SWITCHES SHALL BE GENERAL DUTY UP TO 250 VOLTS, HEAVY DUTY ABOVE 250 VOLTS. FUSIBLE SWITCHES SHALL BE FUSED PER THE NAMEPLATE REQUIREMENTS OF THE EQUIPMENT BEING CONNECTED.

2.13. MOTOR STARTERS: STARTERS SHALL BE MINIMUM NEMA SIZE 1 WITH INTEGRAL CONTROL TRANSFORMER, RED NEON "RUN" PILOT LIGHT AND "ON-OFF-AUTO" SELECTOR SWITCH ON COVER. OVERLOAD DEVICES SHALL BE SIZED PER THE NAMEPLATE AMPERAGE OF THE EQUIPMENT BEING CONTROLLED.

2.14. CONTACTORS: CONTACTORS SHALL BE ELECTRICALLY HELD WITH "ON-OFF-AUTO" SELECTOR SWITCH ON COVER.

2.15. RATINGS: ALL ELECTRICAL EQUIPMENT SHALL BE FULLY RATED FOR BRACING IN EXCESS OF THE MAXIMUM AVAILABLE FAULT CURRENT CALCULATED AND SHOWN AT THE EQUIPMENT CONNECTION POINT WITHIN THE DISTRIBUTION SYSTEM. MINIMUM RATING SHALL BE 10K AIC.

2.16. WIRING DEVICES: WIRING DEVICES (SWITCHES, RECEPTACLES, ETC.) SHALL BE SPECIFICATION GRADE "DECORA" STYLE, MINIMUM 20-AMP RATED. COVER PLATES SHALL BE NYLON. DEVICE AND PLATE COLOR(S) SHALL BE AS SPECIFIED BY ARCHITECT OR INTERIOR DESIGNER - VERIFY PRIOR TO COMMENCEMENT OF WORK. WIRING DEVICES EXPOSED TO THE ELEMENTS SHALL HAVE WEATHERPROOF-IN-USE LOCKABLE COVERS. RAISED STEEL BOX COVERS MAY BE USED IN UTILITY AREAS.

2.17. TRANSFORMERS: TRANSFORMERS SHALL BE TYPE TP-1 MINIMUM, WITH ALUMINUM WINDINGS, RATED FOR 150°C RISE (UNLESS OTHERWISE NOTED), MOUNTED ON RUBBER-IN-SHEAR VIBRATION ISOLATORS, CONNECTED WITH FLEXIBLE CONDUIT. PUBLISHED AND MEASURED NOISE RATING SHALL NOT EXCEED NEMA TP-20 MAXIMUM.

2.18. LIGHTING FIXTURES: LIGHT FIXTURES SHALL BE PROVIDED WITH ALL ASSOCIATED HARDWARE (HANGER BARS, PENDANTS, STEMS, RESTRAINTS, CHAINS, CORDS, LAMPS, ETC.). LENSES SHALL BE ACRYLIC, REFLECTORS SHALL BE ANODIZED. FLUORESCENT BALLASTS SHALL BE ELECTRONIC, PROGRAM RAPID START, THD LESS THAN 10%. FLUORESCENT LAMPS SHALL HAVE MINIMUM CRI OF 80%. INCANDESCENT LAMPS SHALL BE 130 VOLT, INSIDE FROST, MINIMUM 2000 HOUR LIFE. LOW VOLTAGE INCANDESCENT LAMPS SHALL BE HIR HALOGEN, MINIMUM 3000 HOUR LIFE. EXTERIOR LIGHTING FIXTURES SHALL BE INSTALLED TO PREVENT WATER, DUST AND INSECT INTRUSION, WITH GASKETING FOR DOOR/BACKPLATE AND SEALANT AT THE WIRING ENTRY POINT. REFER TO LIGHTING FIXTURE SCHEDULE WITHIN PLAN SET FOR ADDITIONAL REQUIREMENTS (LED CRITERIA, ETC.).

2.19. TAMPERPROOF: ALL EQUIPMENT AND CIRCUITING ACCESSIBLE BY THE PUBLIC SHALL BE DEMONSTRATED TO BE TAMPERPROOF AND VANDAL RESISTANT. OPENABLE DEVICES AND EQUIPMENT SHALL BE PAD LOCKABLE.

PART THREE - EXECUTION

3.1. GROUNDING: GROUND ALL EQUIPMENT AND SYSTEM NEUTRAL IN ACCORDANCE WITH THE REQUIREMENTS OF NEC ARTICLE 250. PROVIDE CODE-SIZED EQUIPMENT GROUNDING CONDUCTOR IN ALL FEEDERS AND BRANCH CIRCUIT RACEWAYS. WHERE ISOLATED GROUNDS ARE INDICATED, PROVIDE INSULATED CONDUCTOR (GREEN WITH YELLOW STRIPE).

3.2. DEMOLITION: PROVIDE COMPLETE ELECTRICAL DEMOLITION - REMOVE EXISTING OUTLETS AND EQUIPMENT IN CONFLICT WITH NEW CONDITIONS. EXISTING CONDUITS REMOVED FROM SERVICE MAY BE ABANDONED IN PLACE IF IN A CONCEALED LOCATION. REMOVE ALL WIRE FROM ABANDONED RACEWAYS. CONTRACTOR SHALL ENSURE CONTINUITY OF EXISTING CIRCUITING PASSING THROUGH DEMOLITION AREAS - EXTEND AND/OR RELOCATE AS NECESSARY. SHIFT OR RELOCATE EXISTING EQUIPMENT AND CIRCUITING AS REQUIRED TO ACCOMMODATE NEW WORK.

3.3. SALVAGE: ALL EXISTING EQUIPMENT REMOVED DURING THE COURSE OF THIS PROJECT SHALL BE OFFERED TO OWNER FOR SALVAGE. ANY EQUIPMENT SELECTED BY OWNER SHALL BE DELIVERED TO OWNER ON SITE. ALL REMAINING EQUIPMENT BECOMES THE PROPERTY OF THIS CONTRACTOR AND SHALL BE REMOVED FROM THE SITE.

3.4. EXISTING SWITCHGEAR: REUSE EXISTING SWITCHGEAR AND PANELBOARDS IN PLACE WHERE SO INDICATED - MODIFY AS REQUIRED TO ACCOMMODATE NEW REQUIREMENTS. PROVIDE NEW CIRCUIT BREAKERS AND/OR FUSES AS REQUIRED WITH AIC RATING TO MEET OR EXCEED THAT OF EXISTING DEVICES. REARRANGE EXISTING CIRCUITS WITHIN PANELS TO AGREE WITH NEW PANEL SCHEDULES. TRACE AND IDENTIFY ALL EXISTING CIRCUITS ON NEW TYPED AS-BUILT PANEL SCHEDULES.

3.5. EXISTING OUTLETS: EXISTING OUTLETS AND CIRCUITING NOT IN CONFLICT WITH NEW CONDITIONS SHALL REMAIN. EXTEND OUTLETS TO NEW SURFACES, CAULK AND PROVIDE JUMBO PLATES AS REQUIRED TO PRESENT A SERVICEABLE AND FINISHED APPEARANCE.

3.6. TEMPORARY CONSTRUCTION POWER: PROVIDE TEMPORARY ELECTRICAL POWER DISTRIBUTION AND LIGHTING AS REQUIRED FOR ALL TRADES THAT REQUIRE SERVICE DURING THE COURSE OF THIS PROJECT IN COMPLIANCE WITH ALL NEC AND OSHA REQUIREMENTS. OWNER SHALL NOT BE RESPONSIBLE FOR TEMPORARY POWER CHARGES.

3.7. LOCATIONS: INDICATED LOCATIONS OF ALL OUTLETS AND EQUIPMENT ARE SUBJECT TO CHANGE. SHIFT/RELOCATE/RECONFIGURE ANY OUTLET, EQUIPMENT OR CONNECTION POINT UP TO 10' AS DIRECTED BY ENGINEER AT NO ADDED COST.

3.8. WORKMANSHIP: THE WORK SHALL BE INSTALLED PARALLEL AND AT RIGHT ANGLES TO THE BUILDING LINES, LEVEL AND PLUMB. THE WORK SHALL BE WELL SUPPORTED AND SOLIDLY MOUNTED. DRESS AND TIE WIRING IN PANELBOARDS AND SWITCHGEAR. THE WORK SHALL BE LEFT CLEAN WITH NO DIRT, DENTS, ABRASIONS, PAINT SPLATTERS, OR OTHER IRREGULARITIES.

3.9. FIRE STOPPING: ALL PENETRATED FIRE RATED SURFACES SHALL BE FIRE SEALED WITH APPROVED U.L. LISTED SEALANTS AS LISTED WITHIN ARCHITECTURAL SPECIFICATIONS. DO NOT EXCEED MAXIMUM ALLOWABLE SURFACE PENETRATIONS DEPENDENT ON RATING OF SURFACES. REFER TO ARCHITECTURAL DRAWINGS FOR DETERMINATION OF PENETRATION LOCATIONS THROUGH FIRE RATED ASSEMBLIES.

3.10. SUPPORTS AND HANGERS: PROVIDE 3" HIGH HOUSEKEEPING CONCRETE PAD BENEATH FLOOR MOUNTED EQUIPMENT, EXTENDING 3" BEYOND EQUIPMENT FOOTPRINT. SUPPORT AND ALIGN ALL RACEWAYS, CABINETS, BOXES, BACK BOXES, FIXTURES, AND EQUIPMENT FROM STRUCTURE. SECURE ALL SUPPORTING METHODS BY MEANS OF TOGGLE BOLTS IN HOLLOW MASONRY, EXPANSION BOLTS IN SOLID MASONRY, CONCRETE PRESET INSERTS OR EXPANSION BOLTS IN CONCRETE, MACHINE SCREWS OR BOLTS IN METAL, AND WOOD SCREWS IN WOOD CONSTRUCTION. ALL SUPPORTING SYSTEMS AND COMPONENTS SHALL BE RATED FOR A MINIMUM OF FIVE (5) TIMES THE ACTUAL LOAD.

3.11. SLEEVES AND PENETRATIONS: PENETRATIONS OF ALL SURFACES SHALL BE PROVIDED WITH SLEEVES THAT SHALL BE SEALED WITH LIKE MATERIALS AND SHALL BE FINISHED WITH ESCUTCHEON PLATES. PENETRATIONS BELOW GRADE LEVEL SHALL BE WATERTIGHT. PENETRATIONS AT EXTERIOR WALLS SHALL BE WEATHERPROOF. ROOF PENETRATIONS SHALL BE FLASHED AND COUNTER FLASHED.

3.12. EXPANSION AND CONTRACTION: RACEWAYS PASSING THROUGH BUILDING EXPANSION JOINTS, ON ROOF, AND IN AREAS OF TEMPERATURE VARIATIONS GREATER THAN 30°F SHALL BE INSTALLED WITH EXPANSION FITTINGS.

3.13. IDENTIFICATION: IDENTIFY ALL EQUIPMENT, SWITCHBOARD CIRCUITS AND ELECTRICALLY-CONNECTED EQUIPMENT WITH ENGRAVED NAMEPLATES. BOXES SHALL BE MARKED WITH PANEL AND CIRCUIT NUMBERS (PERMANENT PEN ACCEPTABLE ABOVE CEILING). NAMEPLATES SHALL BE FASTENED WITH A MINIMUM OF TWO (2) SCREWS. PANEL DIRECTORIES SHALL BE TYPED. CONDUCTORS SHALL BE TAGGED WITH CIRCUIT NUMBERS AT SOURCE, JUNCTION BOXES, AND ALL OUTLET BOXES WITH PERMANENT ADHESIVE MARKER STRIP. IDENTIFY WIRING DEVICES WITH SELF ADHESIVE CLEAR SATIN FINISH LABELS WITH SOURCE AND CIRCUIT NUMBER.

3.14. ELECTRIC ROOM CODE COMPLIANCE: DUE TO THE DIAGRAMMATIC NATURE OF THE DESIGN DOCUMENTS (ELECTRICAL, MECHANICAL, PLUMBING, FIRE SPRINKLER, ETC.), COORDINATE WITH ALL OTHER SUBCONTRACTORS AT THE START OF THIS PROJECT TO INFORM AND VERIFY THAT NO FOREIGN SYSTEMS OR EQUIPMENT ARE MOUNTED ABOVE ELECTRICAL EQUIPMENT OR PASS THROUGH THE DESIGNATED ELECTRIC ROOMS, AND THAT A MINIMUM OF 7'-0" IS PROVIDED AS CLEAR HEADROOM ALONG ACCESS PATHS TO ELECTRIC ROOMS. ANY REROUTING OR RELOCATION OF SYSTEMS THAT A SUBCONTRACTOR FEELS WILL COMPROMISE THE DESIGN INTENT SHALL BE DESCRIBED IN WRITING AND FORWARDED TO THE DESIGN ENGINEER FOR FURTHER REVIEW. ALL PIPING TO HVAC UNITS THAT COOL ELECTRIC ROOMS SHALL BE LOCATED ABOVE ENTRY DOOR. THE SPRINKLER PIPING TO PROVIDE PROTECTION FOR THE ELECTRIC ROOM IS PREFERRED TO ENTER THE ROOM ABOVE THE ENTRY DOOR AND RUN DOWN THE AISLE SPACES OF THE ROOM. ALL INSTALLATIONS SHALL BE FULLY COORDINATED AMONGST ALL TRADES.

3.15. ELECTRICALLY-OPERATED EQUIPMENT: VERIFICATION AND SUBSTITUTION: FEEDERS AND OVER-CURRENT DEVICES (INCLUDING STARTERS, DISCONNECTS, ETC.) HAVE BEEN DESIGNED BASED ON INFORMATION PROVIDED BY THE RESPONSIBLE CONSULTANT AND/OR DESIGNATED SUPPLIER. PRIOR TO ROUGH-IN, COORDINATE WITH THE APPROPRIATE TRADE AND/OR INSTALLER TO DETERMINE THAT THE ACTUAL NAMEPLATE ELECTRICAL REQUIREMENTS MATCH THIS DESIGN. ALL ADDITIONAL ELECTRICAL COSTS RELATED TO THE CONNECTION OF EQUIPMENT WHICH VARIES FROM THE ORIGINAL SPECIFICATIONS SHALL BE RESOLVED WITHIN THE CONSTRUCTION TEAM AT NO ADDITIONAL COST TO THE OWNER.

3.16. HOURS OF OPERATION: CONDUCT WORK TO MINIMIZE DISRUPTION OF OWNER'S ONGOING BUSINESS OPERATIONS. PROVIDE BARRICADES, NOISE ABATEMENT, AND DUST CONTAINMENT MEASURES TO ENSURE THE SAFETY AND COMFORT OF PATRONS, STAFF, AND WORKERS. INTERRUPTIONS OF EXISTING POWER, COMMUNICATIONS, AND/OR FIRE ALARM SYSTEMS SHALL BE PERFORMED ONLY AT SUCH TIMES AS DIRECTED BY OWNER OR RESIDENT ENGINEER. OUTAGES SHALL BE MOMENTARY IN NATURE, EACH SUCH OUTAGE (OR OPERATION WHICH MAY POSE RISK OF AN ACCIDENTAL OUTAGE) SHALL BE SCHEDULED A MINIMUM OF FORTY-EIGHT (48) HOURS IN ADVANCE.

3.17. COMMUNICATIONS SYSTEMS: THE ELECTRICAL CONTRACTOR SHALL PROVIDE OUTLETS AND RACEWAYS FOR COMMUNICATION SYSTEMS AS INDICATED HEREIN, INCLUDING TELEPHONE, DATA, POINT-OF-SALE, SOUND, SECURITY, AUDIO/VISUAL, CCTV, MATV, ETC. CABLING AND DEVICES SHALL BE INSTALLED AND TERMINATED BY OTHERS.

PART FOUR - SPECIAL SYSTEMS

4.1. EXISTING FIRE ALARM SYSTEM - DESIGN/BUILD REVISIONS: EXISTING FIRE ALARM SYSTEM TO REMAIN - MAINTAIN IN CONSTANT OPERATION DURING THIS PROJECT. THESE DOCUMENTS DO NOT INDICATE EXISTING DEVICES, OUTLETS, CONNECTIONS, AND CIRCUITRY OF THE EXISTING FIRE ALARM SYSTEM. PREPARE DESIGN DRAWINGS AND OBTAIN FIRE MARSHALL APPROVAL PRIOR TO ROUGH-IN. NEW COMPONENTS AND CIRCUITING SHALL BE FACTORY CERTIFIED AS BEING PROJECT-SPECIFIC COMPATIBLE WITH EXISTING SYSTEM. ALL CONNECTIONS TO EXISTING SYSTEM SHALL BE PERFORMED BY FACTORY CERTIFIED TECHNICIAN AND SHALL BE ACCEPTED BY OWNER'S SYSTEM-MONITORING AGENCY. AUGMENT/EXPAND FIRE ALARM CONTROL PANEL AND ANNUNCIATOR TO ACCOMMODATE ADDED DEVICES AND/OR ZONES.

4.2. THIRD PARTY TESTING: PROVIDE ALL ASSOCIATED COSTS FOR THIRD PARTY TESTING OF ALL EQUIPMENT, CONDUCTORS, GROUND FAULT, GROUND FAULT COORDINATION STUDY WITH REPORT PREPARATION, ETC. AS REQUIRED BY THE NEC, AHJ AND ALL OTHER GOVERNING AUTHORITIES.

4.3. OTHER SYSTEMS: (NO DESCRIPTION).

DAVID MELROY
Exp: 12/31/2023
ELETRICAL
No. 010379

JULY 31 2023

IZ design studio
design...sustainability...architecture.
tel. 702.441.0026
fax. 702.475.4755
www.izdesignstudio.com
7229 W. Sahara Ave Suite 120
Las Vegas, NV 89117
Nevada

Sheet Name
SPECIFICATIONS

Project Name
SNHD
SNHD BEHAVIORAL HEALTH 2
278 S. DECATUR BLVD
LAS VEGAS, NV 89107

DELTA NO.	REVISION NO.	DESCRIPTION	DATE

Project Number	21479
Date	06.16.2023
Drawn By	IMEG
Checked By	PE

IMEG
370 E. WINDMILL LANE
SUITE 100, LAS VEGAS, NV
89123
PH: 702.896.1100
www.imegcorp.com
IMEG #23002690.00

E001

GENERAL NOTES:

1. MINIMUM EQUIPMENT A.I.C. RATINGS ARE 14K A.I.C. @ 480/277V AND 10K A.I.C. @ 208/120V UNLESS OTHERWISE NOTED.
2. THE DESIGN PROFESSIONAL HAS PERFORMED ALL REQUIRED SHORT CIRCUIT CALCULATIONS AND THE A.I.C. RATINGS INDICATED FOR EACH DEVICE ARE ADEQUATE TO PROTECT THE EQUIPMENT AND THE ELECTRICAL SYSTEM.
3. THE DESIGN PROFESSIONAL HAS PERFORMED ALL THE REQUIRED VOLTAGE DROP CALCULATIONS FOR ALL BRANCH CIRCUITS AND FEEDERS PER 2017 NATIONAL ELECTRICAL CODE ARTICLE 210.19(A)(1), FPN NO. 4.
4. PANELBOARD LOAD SUMMARIES INCLUDE ADDITIONAL 25% OF ALL CONTINUOUS AND LARGEST MOTOR LOADS WHERE APPLICABLE.

SHEET NOTES:

1. EXISTING BRANCH CIRCUIT PANEL SHALL BE REMOVED. REMOVAL SHALL INCLUDE BUT IS NOT LIMITED TO BACK CAN, COVER, CIRCUIT BREAKERS, BUSSING, ETC. REMOVE ALL ASSOCIATED BRANCH CIRCUITS.
2. REMOVE CONDUITS AND CONDUCTORS FROM BRANCH PANEL TO BE DEMOLISHED BACK TO SOURCE.
3. PROVIDE JUNCTION BOX TO INTERCEPT AND EXTEND EXISTING FEEDER AS INDICATED.
4. 2"C - 4 #3/0, 1#6 GND.

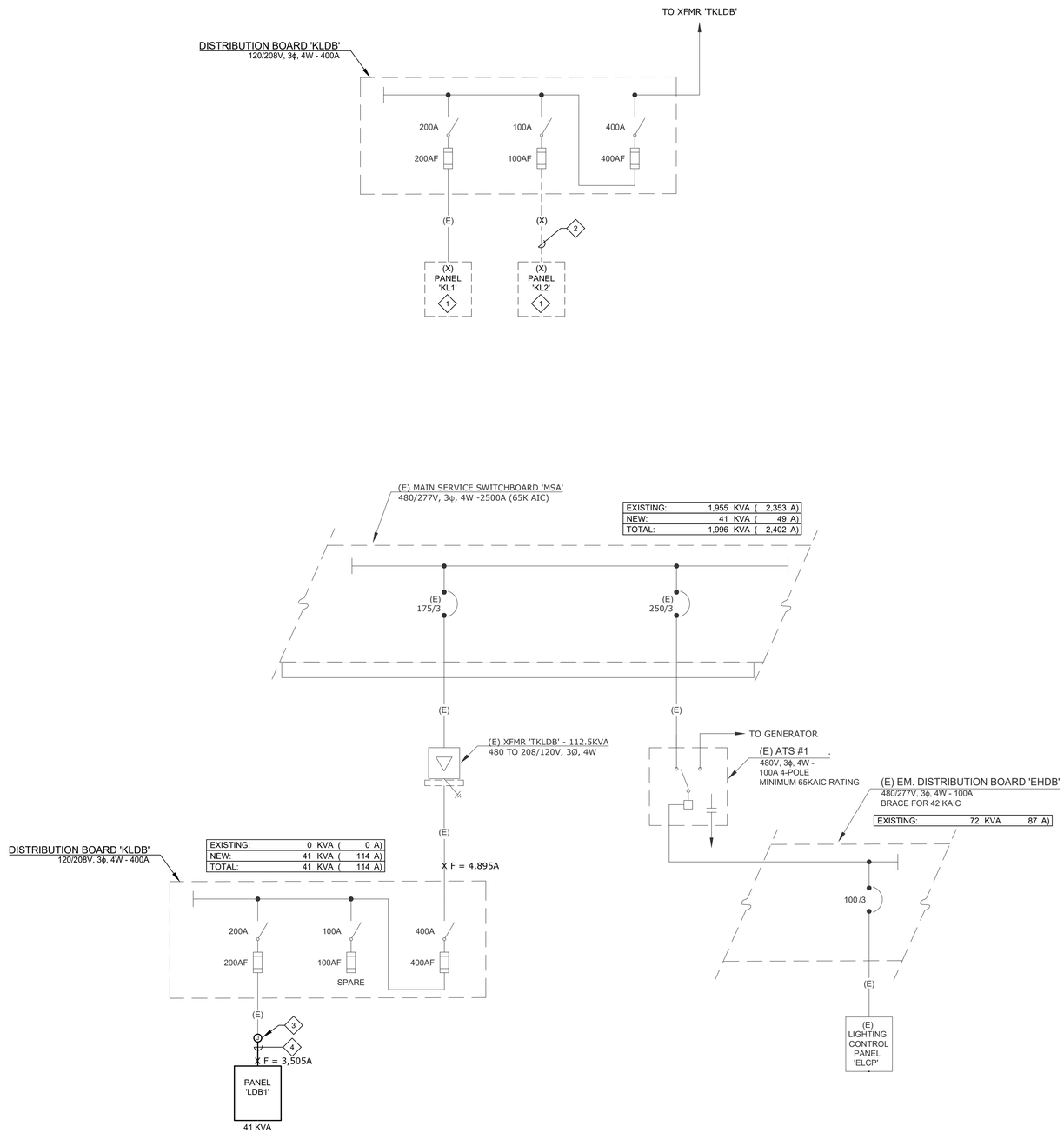

A
E002
SINGLE LINE DIAGRAM
NTS

IMEG
370 E. WINDMILL LANE
SUITE 100, LAS VEGAS, NV
89123
PH: 702.896.1100
www.imegcorp.com
IMEG #23002690.00

PROFESSIONAL ENGINEER - STATE OF NEVADA
DAVID MELROY
Exp: 12/31/2023
ELECTRICAL
No. 010319
JULY 31 2023

IZ design studio
design . . sustainability . . architecture.
tel. 702.441.0026
Fax. 702.475.4755
www.izdesignstudio.com
7229 W. Sahara Ave Suite 100
Las Vegas, NV 89117
Nevada

SINGLE LINE DIAGRAM
SNHD
SNHD BEHAVIORAL HEALTH 2
278 S. DECATUR BLVD
LAS VEGAS, NV 89107

DELTA NO.	REVISION NO.	DESCRIPTION	DATE

Sheet Name
Project Name

Project Number	21479
Date	06.16.2023
Drawn By	IMEG
Checked By	PE

E002

(E) LIGHTING CONTROL PANEL 'ELCP' SCHEDULE

PANEL: 32 RELAYS

RELAY NUMBER	PANEL CIRCUIT	RELAY VOLTAGE	ZONE	CONTROL	LOAD LOCATION/DESCRIPTION
R1		120V	INT	TC	EXISTING
R2		120V	INT	TC	EXISTING
R3		120V	INT	TC	EXISTING
R4		120V	INT	TC	EXISTING
R5		120V	INT	TC	EXISTING
R6		120V	INT	TC	EXISTING
R7		120V	INT	TC	EXISTING
R8		120V	INT	TC	EXISTING
R9		120V	INT	TC	EXISTING
R10		120V	INT	TC	EXISTING
R11		120V	INT	TC	EXISTING
R12		120V	INT	TC	EXISTING
R13		120V	INT	TC	EXISTING
R14		120V	INT	TC	EXISTING
R15		120V	INT	TC	EXISTING
R16		120V	INT	TC	EXISTING
R17		120V	INT	TC	EXISTING
R18		120V	INT	TC	EXISTING
R19	LDB1-2	120V	INT	TC	WAITING ROOM LTG
R20	LDB1-4	120V	INT	TC	OFFICE/GROUP ROOM LTG
R21		120V	INT	TC	EXISTING
R22		120V	INT	TC	EXISTING
R23		120V	INT	TC	EXISTING
R24		120V	INT	TC	EXISTING
R25		120V	INT	TC	EXISTING
R26		120V			SPARE
R27		120V			SPARE
R28		120V			SPARE
R29		120V			SPARE
R30		120V			SPARE
R31		120V			SPARE
R32		120V			SPARE

GENERAL NOTES:

1. MINIMUM EQUIPMENT A.I.C. RATINGS ARE 14K A.I.C. @ 480/277V AND 10K A.I.C. @ 208/120V UNLESS OTHERWISE NOTED.
2. THE DESIGN PROFESSIONAL HAS PERFORMED ALL REQUIRED SHORT CIRCUIT CALCULATIONS AND THE A.I.C. RATINGS INDICATED FOR EACH DEVICE ARE ADEQUATE TO PROTECT THE EQUIPMENT AND THE ELECTRICAL SYSTEM.
3. THE DESIGN PROFESSIONAL HAS PERFORMED ALL THE REQUIRED VOLTAGE DROP CALCULATIONS FOR ALL BRANCH CIRCUITS AND FEEDERS PER 2017 NATIONAL ELECTRICAL CODE ARTICLE 210.19(A)(1), FPN NO. 4.
4. PANELBOARD LOAD SUMMARIES INCLUDE ADDITIONAL 25% OF ALL CONTINUOUS AND LARGEST MOTOR LOADS WHERE APPLICABLE.

SHEET NOTES:

1. ROUTE CIRCUIT THROUGH LIGHTING CONTROL PANEL 'ELCP'. REFER TO ES100 FOR LOCATION OF 'ELCP'.

PANEL 'LDB1' SCHEDULE

NOTE	TYPE	DESCRIPTION	LOAD	BREAKER	CKT		CKT	BREAKER	LOAD	DESCRIPTION	TYPE	NOTE
		WAITING RM RECEPTS	1080	20/1	1		2	20/1	606	WAITING ROOM LTG		1
		MANAGER RM RECEPTS	900	20/1	3		4	20/1	672	OFFICE/GROUP ROOM LTG		1
		RECEPTION RECEPTS	900	20/1	5		6	20	1667			
		HALL/STORAGE RECEPTS	900	20/1	7		8		1667	VAV-1		
		MA RECEPTS	720	20/1	9		10	3	1667			
		MA PRINTER	600	20/1	11		12	25	2000			
		TREATMENT #1 RECEPTS	900	20/1	13		14		2000	VAV-2		
		TREATMENT #2 RECEPTS	900	20/1	15		16	3	2000			
		TREATMENT #3 RECEPTS	900	20/1	17		18	20	1667			
		TREATMENT #4 RECEPTS	900	20/1	19		20		1667	VAV-3		
		GROUP RM RECEPTS	1080	20/1	21		22	3	1667			
		SPARE		20/1	23		24	25	2000			
		SPARE		20/1	25		26		2000	VAV-4		
		SPARE		20/1	27		28	3	2000			
		SPARE		20/1	29		30	30	2667			
		SPARE		20/1	31		32		2667	VAV-5		
		SPARE		20/1	33		34	3	2667			
		SPARE		20/1	35		36	20/1		SPARE		
		SPARE		20/1	37		38	20/1		SPARE		
		SPARE		20/1	39		40	20/1		SPARE		
		SPARE		20/1	41		42	20/1		SPARE		

VOLTS: (●) 208 /120V, 3Ø, 4W.
AMPS: ( ) 100A (●) 225A ( ) 400A ( ) _____
MAIN: (●) MCB 200/3 ( ) MLO
LUGS: ( ) DBL. LUGS ( ) FEED-THRU
MTD: (●) SURFACE ( ) FLUSH
BUSS: (●) COPPER ( ) ALUMINUM
DOOR: (●) DOOR IN DOOR ( ) STANDARD
NEMA RATING: 1
NEUTRAL BUS: (●) 100% ( ) 200%
GROUND BUS: (●) STANDARD ( ) ISOLATED
AIC RATING: (●) 10K ( ) 14K ( ) 22K ( ) _____
SERIES RATING: ( ) _____ / _____

LOADS BY PHASE:

A0:	14	KVA	(120 A)
B0:	14	KVA	(119 A)
C0:	12	KVA	(103 A)

LOAD-TYPE SUBTOTALS:

LIGHTING:	1	KVA
FOOD SERVICE:	0	KVA
LARGEST MOTOR:	0	KVA

LOAD SUBTOTAL:	41	KVA	(114 A)

NEC FACTORED LOADS:

LOAD FACTOR AT 1.25:	1	KVA	(3 A)
LOAD FACTOR AT 0.65	0	KVA	(0 A)
LOAD FACTOR AT 1.25:	0	KVA	(0 A)

CALCULATED LOAD:	41	KVA	(115 A)

IMEG
370 E. WINDMILL LANE
SUITE 100, LAS VEGAS, NV
89123
PH: 702.896.1100
www.imegcorp.com
IMEG #23002690.00

PROFESSIONAL ENGINEER - STATE OF NEVADA
DAVID MELROY
EXP: 12/31/2023
ELECTRICAL
NO. 010319

JULY 31 2023

IZ design studio
design . . sustainability . . architecture .
tel. 702.441.0026
Fax. 702.475.4755
www.izdesignstudio.com
7229 W. Sahara Ave Suite 100
Las Vegas, NV 89117
Nevada

PANEL SCHEDULES

SNHD BEHAVIORAL HEALTH 2
278 S. DECATUR BLVD
LAS VEGAS, NV 89107

Sheet Name
Project Name

DELTA NO.	REVISION NO.	DESCRIPTION	DATE

Project Number	21479
Date	06.16.2023
Drawn By	IMEG
Checked By	PE

E003

LIGHTING FIXTURE SCHEDULE

FIXTURE SCHEDULE GENERAL NOTES:

1. FIXTURES SHALL HAVE APPROPRIATE U.L. LABEL (i.e., DAMP OR WET) AS REQUIRED BY CODES AND ORDINANCES.
2. FIXTURES SHALL INCLUDE ALL ACCESSORIES NECESSARY FOR INSTALLATION ACCORDING TO MANUFACTURER'S SHOP DRAWINGS AND AS REQUIRED BY CODES AND LOCAL ORDINANCES.
3. PRIOR TO ORDERING ANY LIGHTING EQUIPMENT, THE CONTRACTOR SHALL COORDINATE ALL FIXTURE LOCATIONS WITH ARCHITECTURAL REFLECTED CEILING PLANS AND CEILING CAVITY DEPTHS.
4. ALL LAMPS SHALL BE PROVIDED AND INSTALLED ACCORDING TO THE ATTACHED FIXTURE SCHEDULE AND SPECIFICATIONS. ENSURE COMPATIBILITY BETWEEN FIXTURE, LAMP(S) AND BALLAST(S). (OSRAM SYLVANIA SERIES)
5. CONTRACTOR SHALL VERIFY FIXTURE VOLTAGES AND CEILING TRIM COMPATIBILITY PRIOR TO ORDERING FIXTURE.
6. PROVIDE APPROVED FIRE-RATED ENCLOSURES FOR ALL LIGHTING FIXTURES LOCATED IN FIRE-RATED CEILINGS.
7. LIGHTING FIXTURE CATALOG NUMBERS ARE SERIES TYPE ONLY. PROVIDE ALL NECESSARY HARDWARE AS REQUIRED BY THE SPECIFICATIONS, DRAWINGS, AND PROJECT CONDITIONS FOR A COMPLETE INSTALLATION.
8. ENSURE COMPATIBILITY OF ALL LIGHTING SYSTEM COMPONENTS, ESPECIALLY DIMMED SYSTEMS. FIXTURES, LED DRIVERS, LAMPS, BALLAST(S), AND DIMMING SYSTEMS/INDIVIDUAL CONTROLS SHALL BE FACTORY CERTIFIED COMPATIBLE FOR FULL RANGE OF DIMMING COMPATIBILITY.
9. PROVIDE CLEARANCES FROM COMBUSTIBLES: A MINIMUM OF 1/2" (OTHER THAN AT POINTS OF SUPPORT) AND 3" FROM INSULATION FOR RECESSED LIGHTING FIXTURES WHICH ARE NON-IC RATED.
10. FOR FIXTURES RECESSED IN SUSPENDED T-BAR CEILING, PROVIDE A MINIMUM OF TWO (2) #12 SUPPORT WIRES ATTACHED TO BUILDING FRAME IN ADDITION TO T-BAR CLIPS.
11. FIXTURES WITH EMERGENCY BATTERY BACKUP SHALL BE WIRED AHEAD OF ANY LOCAL SWITCHING IN COMPLIANCE WITH NEC ARTICLE 700.
12. EMERGENCY LIGHTING UNITS SHALL BE EQUIPPED WITH FACTORY-INSTALLED INTEGRAL TEST SWITCHES.
13. FOR ALL FIXTURES LOCATED IN FOOD SERVICE AREAS, PROVIDE DOOR-TO-FRAME AND LENS-TO-DOOR GASKETING, INVERTED LENS, AND FOOD SERVICE RATING.
14. LED FIXTURES SHALL EQUAL OR EXCEED THE FOLLOWING MINIMUM REQUIREMENTS:
    - L8/50: 80% OF LUMEN OUTPUT AT 50,000 HOURS
    - CRI GREATER THAN OR EQUAL TO 80.
    - LUMENS PER WATT: DOWNLIGHTS = GREATER THAN 60, OTHERWISE GREATER THAN 90.
    - UNIFORMITY: (3) MCADAMS ELLIPSES.
    - FUNCTIONAL LIFE: GREATER THAN 60,000 HOURS
    - INTERIOR AMBIENT: GREATER THAN 40°C, 104°F
    - EXTERIOR AMBIENT: GREATER THAN 50°C, 122°F
    - SEAL AGAINST DUST AND INSECT ENTRY.
    - POWER FACTOR: 0.9 OR BETTER.
    - MANUFACTURERS GUARANTEE: 5 YEARS.
15. FOR LED RETROFIT LAMPS, PROVIDE SELF-BALLASTED LED LAMPS WITH THESE CHARACTERISTICS:
    - CRI GREATER THAN OR EQUAL TO 80.
    - COLOR = 2700K OR 3000K
    - LIFE = GREATER THAN OR EQUAL 25,000 HOURS
    - MANUFACTURERS GUARANTEE = 5 YEARS.
    - DIMMABLE AS NOTED.
    - LUMENS AS NOTED.
16. WHERE FIXTURE AND/OR LAMP IS SPECIFIED BY MANUFACTURER AND CATALOG NUMBER, PERFORMANCE OF PROPOSED SUBSTITUTE SHALL EQUAL OR EXCEED PUBLISHED DATA OF THE SPECIFIED FIXTURE.

TYPE	DESCRIPTION	LAMP	CONTROL	VOLTAGE	LOAD	MANUFACTURER	SERIES	NOTES
L1	2' X 4' LED TROFFER	LED	LOCAL/TC	UNV	48W	METALUX	#24GR-LD5-72-F1-UNV-CD	
L1E	2' X 4' LED TROFFER WITH EMERGENCY BATTERY BACKUP	LED	LOCAL/TC	UNV	48W	METALUX	#24GR-LD5-72-F1-UNV-EL14W-CD	
L2E	2' X 2' LED TROFFER WITH EMERGENCY BATTERY BACKUP	LED	LOCAL/TC	120V	35W	METALUX	#22GR-LD5-36-F1-UNV-EL14W-CD	
L3	4" RECESSED DOWNLIGHT	LED	LOCAL/TC	UNV	23W	PORTFOLIO	#LDSQ4C209040D010SQ1H	
X1	EXIT SIGN. MOUNTING AND CHEVRONS PER PLANS.	LED	N/A	120V	5W	SURE-LITES	#EUX7-R-SD	

IMEG
370 E. WINDMILL LANE
SUITE 100, LAS VEGAS, NV
89123
PH: 702.896.1100
www.imegcorp.com
IMEG #23002690.00

PROFESSIONAL ENGINEER - STATE OF NEVADA
DAVID MEADOR
EXP: 12/31/2023
ELECTRICAL
No. 010379

JULY 31 2023

IZ design studio
design...sustainability...architecture.
tel. 702.441.0026
Fax. 702.475.4755
www.izdesignstudio.com
7229 W. Sahara Ave Suite 100
Las Vegas, NV 89117
Nevada

LIGHTING FIXTURE SCHEDULE

SNHD BEHAVIORAL HEALTH 2

278 S. DECATUR BLVD
LAS VEGAS, NV 89107

DELTA NO.	REVISION NO.	DESCRIPTION	DATE
1		CORRECTION#1	08.02.2023

Sheet Name

Project Name

Project Number	21479
Date	06.16.2023
Drawn By	IMEG
Checked By	PE

E004

LIGHTING COMPLIANCE CERTIFICATE

COM*check* Software Version 4.1.5.3

Interior Lighting Compliance Certificate

Project Information

Energy Code: 2018 IECC
Project Title: SNHD Behavioral Health
Project Type: Alteration

Construction Site:
278 S. Decatur Blvd
Las Vegas, NV 89107

Owner/Agent:
see plans

Designer/Contractor:
see plans

Allowed Interior Lighting Power

A Area Category	B Floor Area (ft2)	C Allowed Watts / ft2	D Allowed Watts (B X C)
1-Behavioral Health Office (Health Care-Clinic)	1977	0.82	1621
		Total Allowed Watts =	1621

Proposed Interior Lighting Power

A Fixture ID : Description / Lamp / Wattage Per Lamp / Ballast	B Lamps/ Fixture	C # of Fixtures	D Fixture Watt.	E (C X D)
Behavioral Health Office (Health Care-Clinic 1977 sq.ft.)				
LED 1: L1/L1E: 2'X4' LED TROFFER: Other:	1	24	48	1152
LED 2: L2E: 2'X2' LED TROFFER: Other:	1	2	35	70
LED 3: L3: 4" RECESSED DOWNLIGHT: Other:	1	2	23	46
			Total Proposed Watts =	1268

Interior Lighting PASSES

Interior Lighting Compliance Statement

Compliance Statement: The proposed interior lighting alteration project represented in this document is consistent with the building plans, specifications, and other calculations submitted with this permit application. The proposed interior lighting systems have been designed to meet the 2018 IECC requirements in COM*check* Version 4.1.5.3 and to comply with any applicable mandatory requirements listed in the Inspection Checklist.

Name - Title _____ Signature _____ Date _____

Project Title: SNHD Behavioral Health Report date: 07/28/23

COMcheck Software Version 4.1.5.3

Inspection Checklist

Energy Code: 2018 IECC

Requirements: 100.0% were addressed directly in the COMcheck software

Text in the "Comments/Assumptions" column is provided by the user in the COMcheck Requirements screen. For each requirement, the user certifies that a code requirement will be met and how that is documented, or that an exception is being claimed. Where compliance is itemized in a separate table, a reference to that table is provided.

Section # & Req.ID	Plan Review	Complies?	Comments/Assumptions
C103.2 [PR4]1	Plans, specifications, and/or calculations provide all information with which compliance can be determined for the interior lighting and electrical systems and equipment and document where exceptions to the standard are claimed. Information provided should include interior lighting power calculations, wattage of bulbs and ballasts, transformers and control devices.	☐Complies ☐Does Not ☐Not Observable ☐Not Applicable	Requirement will be met. Location on plans/spec: Refer to Sheet E004

Additional Comments/Assumptions:

Section # & Req.ID	Rough-In Electrical Inspection	Complies?	Comments/Assumptions
C405.2.2.2 [EL22]1	Spaces required to have light-reduction controls have a manual control that allows the occupant to reduce the connected lighting load in a reasonably uniform illumination pattern >= 50 percent.	☐Complies ☐Does Not ☐Not Observable ☐Not Applicable	Requirement will be met. Location on plans/spec: Refer to Sheet E300
C405.2.1.1, C405.2.1.1 [EL18]1	Occupancy sensors installed in classrooms/lecture/training rooms, conference/meeting/multipurpose rooms, copy/print rooms, lounges/breakrooms, enclosed offices, open plan office areas, restrooms, storage rooms, locker rooms, warehouse storage areas, and other spaces <= 300 sqft that are enclosed by floor-to-ceiling height partitions. Reference section language C405.2.1.2 for control function in warehouses and section C405.2.1.3 for open plan office spaces.	☐Complies ☐Does Not ☐Not Observable ☐Not Applicable	Requirement will be met. Location on plans/spec: Please refer to Sheet E300
C405.2.1.2 [EL19]1	Occupancy sensors control function in warehouses: In warehouses, the lighting in aisleways and open areas is controlled with occupant sensors that automatically reduce lighting power by 50% or more when the areas are unoccupied. The occupant sensors control lighting in each aisleway independently and do not control lighting beyond the aisleway being controlled by the sensor.	☐Complies ☐Does Not ☐Not Observable ☐Not Applicable	Exception: Requirement does not apply.
C405.2.1.3 [EL20]1	Occupant sensor control function in open plan office areas: Occupant sensor controls in open office spaces >= 300 sq.ft. have controls 1) configured so that general lighting can be controlled separately in control zones with floor areas <= 600 sq.ft. within the space, 2) automatically turn off general lighting in all control zones within 20 minutes after all occupants have left the space, 3) are configured so that general lighting power in each control zone is reduced by >= 80% of the full zone general lighting power within 20 minutes of all occupants leaving that control zone, and 4) are configured such that any daylight responsive control will activate space general lighting or control zone general lighting only when occupancy for the same area is detected.	☐Complies ☐Does Not ☐Not Observable ☐Not Applicable	Requirement will be met. Location on plans/spec: Refer to Sheet E300
C405.2.2.1, C405.2.2.1, C405.2.2.2 [EL21]2	Each area not served by occupancy sensors (per C405.2.1) have time-switch controls and functions detailed in sections C405.2.2.1 and C405.2.2.2.	☐Complies ☐Does Not ☐Not Observable ☐Not Applicable	Requirement will be met. Location on plans/spec: Refer to Sheet E300

1 High Impact (Tier 1) 2 Medium Impact (Tier 2) 3 Low Impact (Tier 3)

Project Title: SNHD Behavioral Health Report date: 07/28/23
Data filename: \\files\Active\Projects\2023\23002690.00\Design\Electrical\20230613-2018 IECC ELEC-SNHD.cck Page 2 of 6

1 High Impact (Tier 1) 2 Medium Impact (Tier 2) 3 Low Impact (Tier 3)

Project Title: SNHD Behavioral Health Report date: 07/28/23
Data filename: \\files\Active\Projects\2023\23002690.00\Design\Electrical\20230613-2018 IECC ELEC-SNHD.cck Page 3 of 6

Section # & Req.ID	Rough-In Electrical Inspection	Complies?	Comments/Assumptions
C405.2.3.3, C405.2.3.3.1, C405.2.3.3.2 [EL23]2	Daylight zones provided with individual controls that control the lights independent of general area lighting. See code section C405.2.3 Daylight-responsive controls for applicable spaces, C405.2.3.1 Daylight responsive control function and section C405.2.3.2 Sidelit zone.	☐Complies ☐Does Not ☐Not Observable ☐Not Applicable	Exception: Requirement does not apply.
C405.2.4 [EL26]1	Separate lighting control devices for specific uses installed per approved lighting plans.	☐Complies ☐Does Not ☐Not Observable ☐Not Applicable	Requirement will be met. Location on plans/spec: Refer to Sheet E300
C405.2.4 [EL27]1	Additional interior lighting power allowed for special functions per the approved lighting plans and is automatically controlled and separated from general lighting.	☐Complies ☐Does Not ☐Not Observable ☐Not Applicable	Requirement will be met. Location on plans/spec: Refer to Sheet E004
C405.3 [EL6]1	Exit signs do not exceed 5 watts per face.	☐Complies ☐Does Not ☐Not Observable ☐Not Applicable	Requirement will be met. Location on plans/spec: Refer to Sheet E004
C405.6 [EL26]2	Low-voltage dry-type distribution electric transformers meet the minimum efficiency requirements of Table C405.6.	☐Complies ☐Does Not ☐Not Observable ☐Not Applicable	Exception: Requirement does not apply.
C405.7 [EL27]2	Electric motors meet the minimum efficiency requirements of Tables C405.7(1) through C405.7(4). Efficiency verified through certification under an approved certification program or the equipment efficiency ratings shall be provided by motor manufacturer (where certification programs do not exist).	☐Complies ☐Does Not ☐Not Observable ☐Not Applicable	Exception: Requirement does not apply.
C405.8.2, C405.8.2.1 [EL28]2	Escalators and moving walks comply with ASME A17.1/CSA B44 and have automatic controls configured to reduce speed to the minimum permitted speed in accordance with ASME A17.1/CSA B44 or applicable local code when not conveying passengers.	☐Complies ☐Does Not ☐Not Observable ☐Not Applicable	Exception: Requirement does not apply.
C405.9 [EL29]2	Total voltage drop across the combination of feeders and branch circuits <= 5%.	☐Complies ☐Does Not ☐Not Observable ☐Not Applicable	Requirement will be met.

Additional Comments/Assumptions:

1 High Impact (Tier 1) 2 Medium Impact (Tier 2) 3 Low Impact (Tier 3)

Project Title: SNHD Behavioral Health Report date: 07/28/23
Data filename: \\files\Active\Projects\2023\23002690.00\Design\Electrical\20230613-2018 IECC ELEC-SNHD.cck Page 4 of 6

Section # & Req.ID	Final Inspection	Complies?	Comments/Assumptions
C303.3, C408.2.5.2 [FI17]3	Furnished O&M instructions for systems and equipment to the building owner or designated representative.	☐Complies ☐Does Not ☐Not Observable ☐Not Applicable	Requirement will be met.
C405.4.1 [FI18]1	Interior installed lamp and fixture lighting power is consistent with what is shown on the approved lighting plans, demonstrating proposed watts are less than or equal to allowed watts.	☐Complies ☐Does Not ☐Not Observable ☐Not Applicable	*See the Interior Lighting fixture schedule for values.*
C408.1.1 [FI57]1	Building operations and maintenance documents will be provided to the owner. Documents will cover manufacturers' information, specifications, programming procedures and means of illustrating to owner how building, equipment and systems are intended to be installed, maintained, and operated.	☐Complies ☐Does Not ☐Not Observable ☐Not Applicable	Requirement will be met.
C408.2.5.1 [FI16]3	Furnished as-built drawings for electric power systems within 90 days of system acceptance.	☐Complies ☐Does Not ☐Not Observable ☐Not Applicable	Requirement will be met.
C408.3 [FI33]1	Lighting systems have been tested to ensure proper calibration, adjustment, programming, and operation.	☐Complies ☐Does Not ☐Not Observable ☐Not Applicable	Requirement will be met.

Additional Comments/Assumptions:

1 High Impact (Tier 1) 2 Medium Impact (Tier 2) 3 Low Impact (Tier 3)

Project Title: SNHD Behavioral Health Report date: 07/28/23
Data filename: \\files\Active\Projects\2023\23002690.00\Design\Electrical\20230613-2018 IECC ELEC-SNHD.cck Page 5 of 6

PROFESSIONAL ENGINEER - STATE OF NEVADA
DAVID MEADOR
EXP: 12/31/2023
ELECTRICAL
NO. 010379

JULY 31 2023

IZ design studio
design . . . sustainability . . . architecture.
tel. 702.441.0026
Fax. 702.475.4755
www.izdesignstudio.com
7229 W. Sahara Ave Suite 100
Las Vegas, NV 89117
Nevada

LIGHTING COMPLIANCE CERTIFICATE
SNHD
SNHD BEHAVIORAL HEALTH 2
278 S. DECATUR BLVD
LAS VEGAS, NV 89107

DELTA NO.	REVISION NO.	DESCRIPTION	DATE
1		CORRECTION#1	08.02.2023

Sheet Name

Project Name

NEW SHEET

Project Number	21479
Date	06.16.2023
Drawn By	IMEG
Checked By	PE

E005

IMEG
370 E. WINDMILL LANE
SUITE 100, LAS VEGAS, NV
89123
PH: 702.896.1100
www.imegcorp.com
IMEG #23002690.00

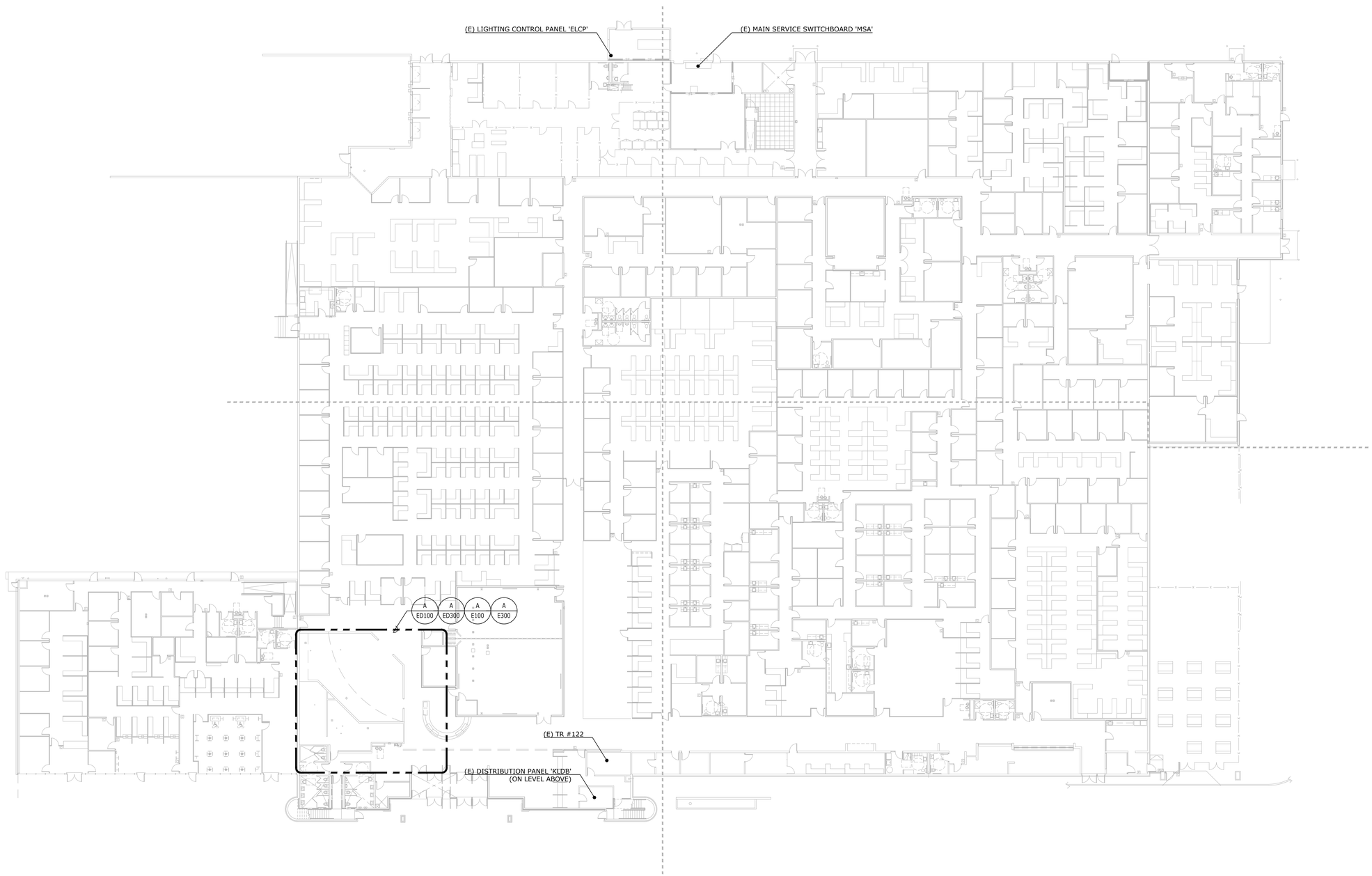

A ES100 ELECTRICAL OVERALL PLAN
1/4" = 1'-0"

0' 1' 2' 4' 8'

NORTH

PROFESSIONAL ENGINEER - STATE OF NEVADA
DAVID MEYROV
EXP: 12/31/2023
ELECTRICAL
NO. 010379

JULY 31 2023

IZ design studio
design...sustainability...architecture.
tel. 702.441.0026
Fax. 702.475.4755
www.izdesignstudio.com
7229 W. Sahara Ave Suite 100
Las Vegas, NV 89117
Nevada

ELECTRICAL OVERALL PLAN

SNHD

SNHD BEHAVIORAL HEALTH 2

278 S. DECATUR BLVD
LAS VEGAS, NV 89107

Sheet Name

Project Name

DELTA NO.	REVISION NO.	DESCRIPTION	DATE

Project Number	21479
Date	06.16.2023
Drawn By	IMEG
Checked By	PE

ES100

IMEG
370 E. WINDMILL LANE
SUITE 100, LAS VEGAS, NV
89123
PH: 702.896.1100
www.imegcorp.com
IMEG #23002690.00

GENERAL NOTES:

1. THE CONTRACTOR SHALL REMOVE ITEMS AS INDICATED. REMOVAL SHALL INCLUDE BUT IS NOT LIMITED TO DEVICE, JUNCTION BOXES, CONDUITS, CONDUCTORS, ETC. BACK TO SOURCE.
2. THE CONTRACTOR SHALL BE RESPONSIBLE TO MAINTAIN THE CONTINUITY OF ALL FEEDERS AND BRANCH CIRCUITS SCHEDULED TO REMAIN WHICH MAY ROUTE THROUGH THE AREA OF DEMOLITION.
3. REFER TO THE ARCHITECTURAL DRAWINGS FOR THE EXACT LIMITS OF DEMOLITION.

SHEET NOTES:

1. UNLESS OTHERWISE NOTED, THE CONTRACTOR SHALL REMOVE ALL EXISTING ELECTRICAL OUTLETS IN THIS AREA. REMOVAL SHALL INCLUDE BUT IS NOT LIMITED TO OUTLETS, FIXTURES, BRANCH CIRCUITS, CONDUITS, CONDUCTORS, DISTRIBUTION EQUIPMENT, ETC. BACK TO SOURCE.
2. THE CONTRACTOR SHALL REMOVE EXISTING PANEL AND ALL ASSOCIATED CONDUITS AND CONDUCTORS BACK TO NEAREST ACCESSIBLE AREA. REFER TO E002 FOR ADDITIONAL INFORMATION.
3. EXISTING MECHANICAL UNIT TO BE REMOVED. REMOVAL SHALL INCLUDE BUT NOT BE LIMITED TO REMOVAL OF MECHANICAL UNIT, JUNCTION BOX, CONDUIT, CONDUCTORS, ETC. FROM UNIT TO POINT OF SOURCE. REFER TO MECHANICAL DRAWINGS FOR ADDITIONAL INFORMATION.

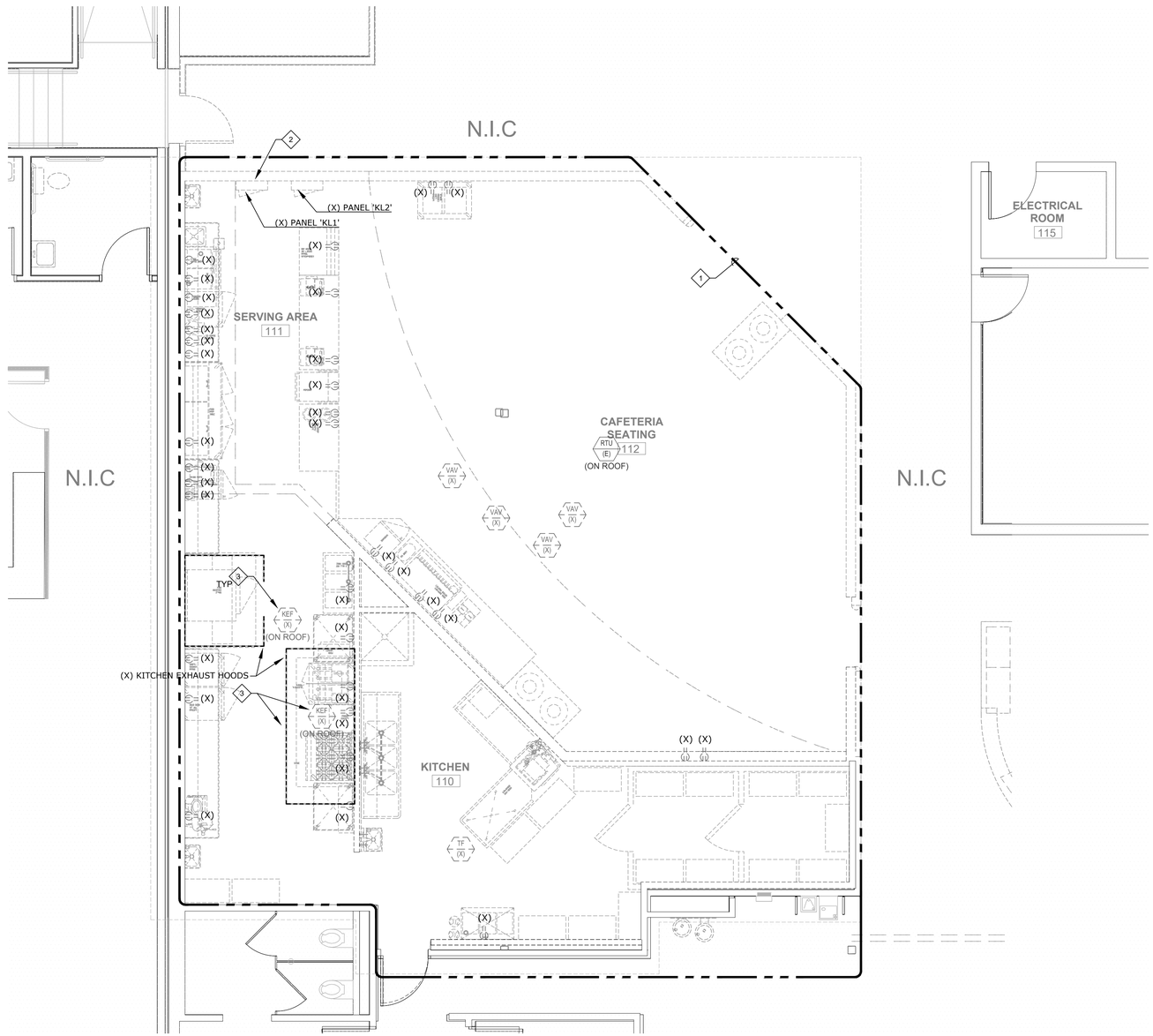

A ED100 DEMOLITION POWER AND SIGNAL PLAN
1/4" = 1'-0"

0' 1' 2' 4' 8'

NORTH

IMEG
370 E. WINDMILL LANE
SUITE 100, LAS VEGAS, NV
89123
PH: 702.896.1100
www.imegcorp.com
IMEG #23002690.00

PROFESSIONAL ENGINEER - STATE OF NEVADA
DAVID MEADOR
Exp: 12/31/2023
ELECTRICAL
No. 010319

JULY 31 2023

IZ design studio
design...sustainability...architecture.
tel. 702.441.0026
Fax. 702.475.4755
www.izdesignstudio.com
7229 W. Sahara Ave Suite 100
Las Vegas, NV 89117
Nevada

Sheet Name
DEMOLITION POWER AND SIGNAL PLAN

Project Name
SNHD BEHAVIORAL HEALTH 2
278 S. DECATUR BLVD
LAS VEGAS, NV 89107

DELTA NO.	REVISION NO.	DESCRIPTION	DATE

Project Number	21479
Date	06.16.2023
Drawn By	IMEG
Checked By	PE

ED100

GENERAL NOTES:

1. THE CONTRACTOR SHALL REMOVE ITEMS AS INDICATED. REMOVAL SHALL INCLUDE BUT IS NOT LIMITED TO DEVICE, JUNCTION BOXES, CONDUITS, CONDUCTORS, ETC. BACK TO SOURCE.
2. THE CONTRACTOR SHALL BE RESPONSIBLE TO MAINTAIN THE CONTINUITY OF ALL FEEDERS AND BRANCH CIRCUITS SCHEDULED TO REMAIN WHICH MAY ROUTE THROUGH THE AREA OF DEMOLITION.
3. REFER TO THE ARCHITECTURAL DRAWINGS FOR THE EXACT LIMITS OF DEMOLITION.

SHEET NOTES:

1. THE CONTRACTOR SHALL REMOVE EXISTING LIGHT FIXTURE. PATCH AND REPAIR SURFACE WHEN REQUIRED.

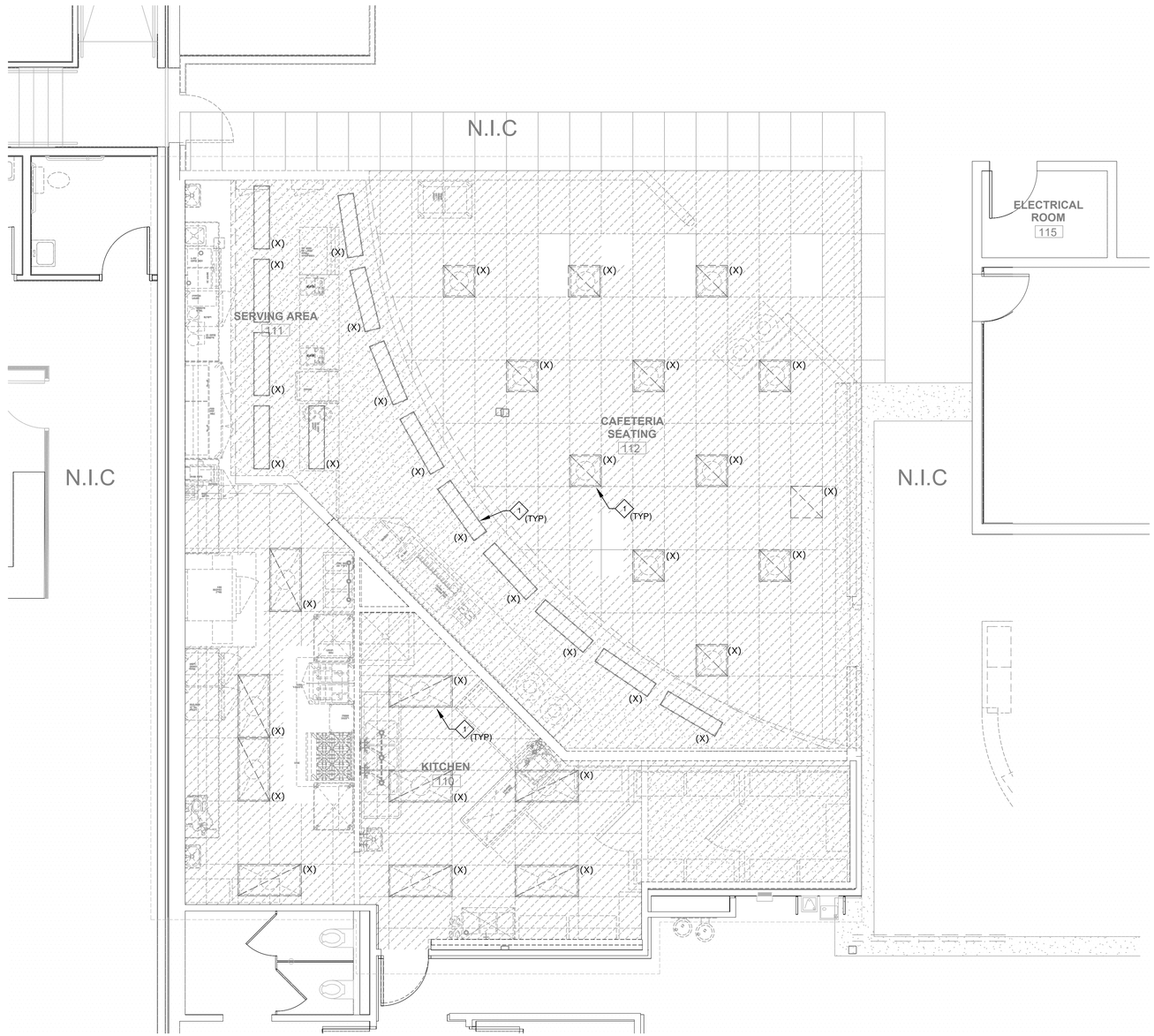

A ED300 DEMOLITION LIGHTING PLAN
1/4" = 1'-0"

0' 1' 2' 4' 8'

NORTH

IMEG
370 E. WINDMILL LANE
SUITE 100, LAS VEGAS, NV
89123
PH: 702.896.1100
www.imegcorp.com
IMEG #23002690.00

PROFESSIONAL ENGINEER - STATE OF NEVADA
DAVID MEADOR
EXP: 12/31/2023
ELECTRICAL
No. 010319

JULY 31 2023

IZ design studio
design...sustainability...architecture.
tel. 702.441.0026
Fax. 702.475.4755
www.izdesignstudio.com
7229 W. Sahara Ave Suite 100
Las Vegas, NV 89117
Nevada

DEMOLITION LIGHTING PLAN
SNHD
SNHD BEHAVIORAL HEALTH 2
278 S. DECATUR BLVD
LAS VEGAS, NV 89107

Sheet Name
Project Name

DELTA NO.	REVISION NO.	DESCRIPTION	DATE

Project Number	21479
Date	06.16.2023
Drawn By	IMEG
Checked By	PE

ED300

GENERAL NOTES:

1. COORDINATE EXACT LOCATION AND MOUNTING HEIGHT FOR ALL DEVICES WITH ARCHITECTURAL DRAWINGS PRIOR TO ROUGH-IN.
2. COORDINATE WITH MECHANICAL CONTRACTOR ALL EQUIPMENT LOCATIONS PRIOR TO ROUGH-IN.
3. VERIFY COLOR/FINISH OF ALL DEVICES IN PUBLIC AREAS WITH ARCHITECT.
4. REFER TO ES100 FOR LOCATION OF IT RACK.
5. VOICE/DATA OUTLET NUMBER INDICATES NUMBER OF PORTS/CABLES OF THAT OUTLET.
6. ALL DATA AND ELECTRICAL OUTLETS IN GROUP ROOMS, MANAGER AND TREATMENT ROOMS TO BE INSTALLED WITH INTERNAL INTUMESCENT PUTTY PAD. ANY GAPS BETWEEN ELECTRICAL BOXES AND WALLS SHALL BE FILLED WITH FIBERGLASS AND SEALED WITH ACOUSTICAL SEALANT.
7. ALL CIRCUITS INSTALLED IN HEALTH CARE AREAS SHALL CONTAIN AN ADDITIONAL GROUND CONDUCTOR AS PER NEC ARTICLE 517. BRANCH CIRCUIT INSTALLED AS MC CABLE SHALL BE MEDICAL GRADE MC CABLE WITH REDUNDANT GROUND.
8. ALL OUTLETS IN MEDICAL OFFICES, CORRIDORS, AND WAITING ROOMS TO BE TAMPERPROOF PER NEC 406.15(5).
9. TREATMENT ROOMS WILL NOT BE USED FOR MEDICAL TREATMENT AND DO NOT FALL UNDER THE REQUIREMENTS OF NEC ARTICLE 517.

SHEET NOTES:

1. EXTEND AND CONNECT CIRCUITING FROM JUNCTION BOX TO OUTLETS IN AREA WITH SAME CIRCUIT NUMBERS, ROUTE #12 CONDUCTORS (MINIMUM) THROUGHOUT, UON.
2. PROVIDE & INSTALL TWO (2) CAT6 CABLE TO 4S JUNCTION BOX FOR TV VIA 1" CONDUIT WITH BUSHING STUB ABOVE CEILING TO IT RACK. COORDINATE MOUNTING LOCATION WITH ARCHITECTURAL DRAWINGS PRIOR TO ROUGH-IN.
3. JUNCTION BOX FOR CONNECTION TO WIRELESS ACCESS POINT. ROUTE 1'' CONDUIT WITH (1) CAT 6 CABLE TO IT RACK. COORDINATE EXACT LOCATION WITH OWNER'S REPRESENTATIVE PRIOR TO ROUGH-IN.
4. ROUTE 1'' CONDUIT WITH CAT6 CABLE (NUMBER OF CABLES AS INDICATED) TO TR #122. ALL LOW VOLTAGE CABLING TO BE PLENUM RATED.
5. ROUTE 3/4" CONDUIT WITH 18/2 SPEAKER CABLE TO TR #122. ALL LOW VOLTAGE CABLING TO BE PLENUM RATED.

N.I.C

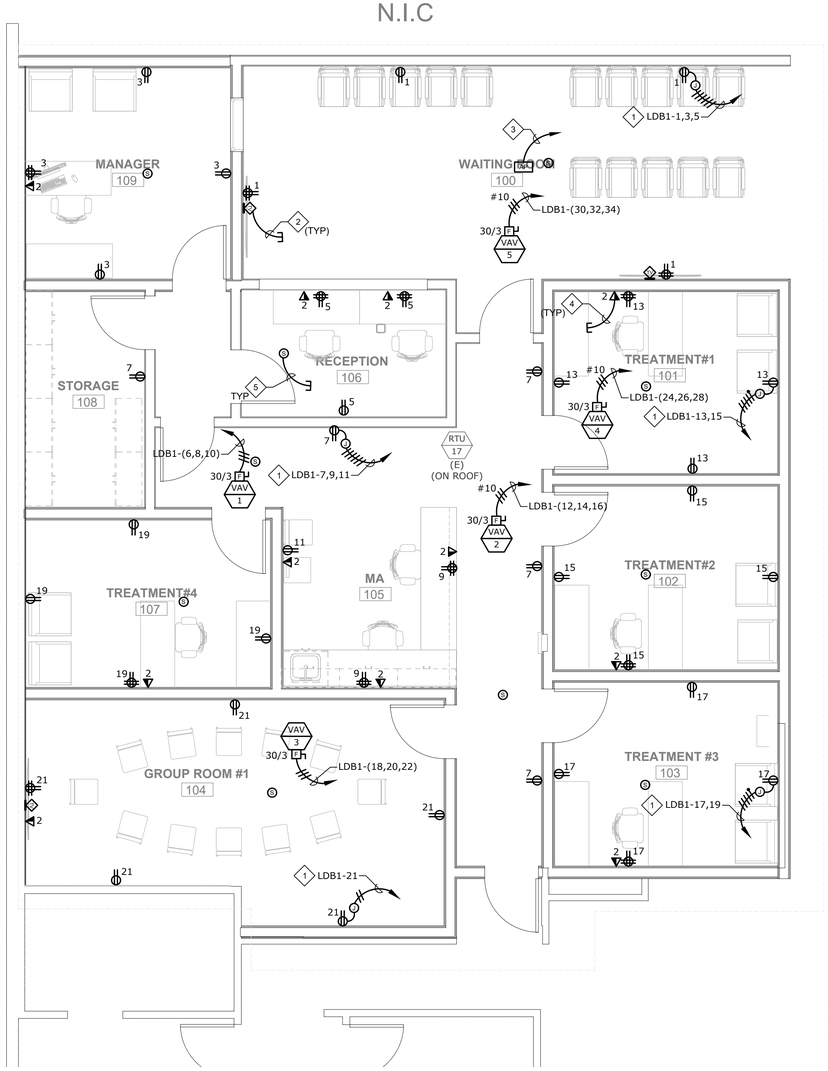

N.I.C

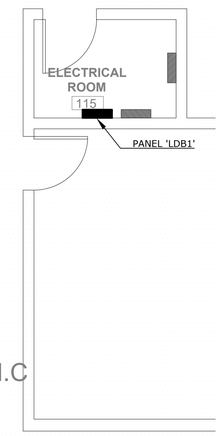

N.I.C

A
E100

POWER AND SIGNAL PLAN

1/4" = 1'-0"

0' 1' 2' 4' 8'

NORTH

IMEG
370 E. WINDMILL LANE
SUITE 100, LAS VEGAS, NV
89123
PH: 702.896.1100
www.imegcorp.com
IMEG #23002690.00

PROFESSIONAL ENGINEER - STATE OF NEVADA
DAVID MEADOR
Exp: 12/31/2023
ELECTRICAL
No. 010319

JULY 31 2023

IZ design studio
design. . . sustainability. . . architecture.
tel. 702.441.0026
Fax. 702.475.4755
www.izdesignstudio.com
7229 W. Sahara Ave Suite 100
Las Vegas, NV 89117
Nevada

POWER AND SIGNAL PLAN
SNHD
SNHD BEHAVIORAL HEALTH 2
278 S. DECATUR BLVD
LAS VEGAS, NV 89107

DELTA NO.	REVISION NO.	DESCRIPTION	DATE
1		CORRECTION#1	08.02.2023

Sheet Name

Project Name

Project Number	21479
Date	06.16.2023
Drawn By	IMEG
Checked By	PE

E100

GENERAL NOTES:

1. THE CONTRACTOR SHALL REFER TO THE ARCHITECTURAL DRAWINGS FOR THE EXACT MOUNTING LOCATION OF ALL DEVICES PRIOR TO ROUGH-IN.
2. ALL EXIT/EMERGENCY LIGHTING TO BE CIRCUITED AHEAD OF LOCAL SWITCHES.
3. ALL LIGHT FIXTURES SCHEDULED WITH A BATTERY PACK OR DESIGNATED 'NL' SHALL BE CIRCUITED WITH AN UN-SWITCHED HOT CONDUCTOR.
4. THE CONTRACTOR SHALL INSTALL A NEUTRAL CONDUCTOR FOR ALL OCCUPANCY SENSORS PER SECTION 404.2.C OF NEC.

SHEET NOTES:

1. EXTEND AND CONNECT CIRCUITING FROM JUNCTION BOX TO LUMINAIRES IN AREA WITH SAME CIRCUIT NUMBERS, ROUTE #12 CONDUCTORS (MINIMUM) THROUGHOUT, UON.

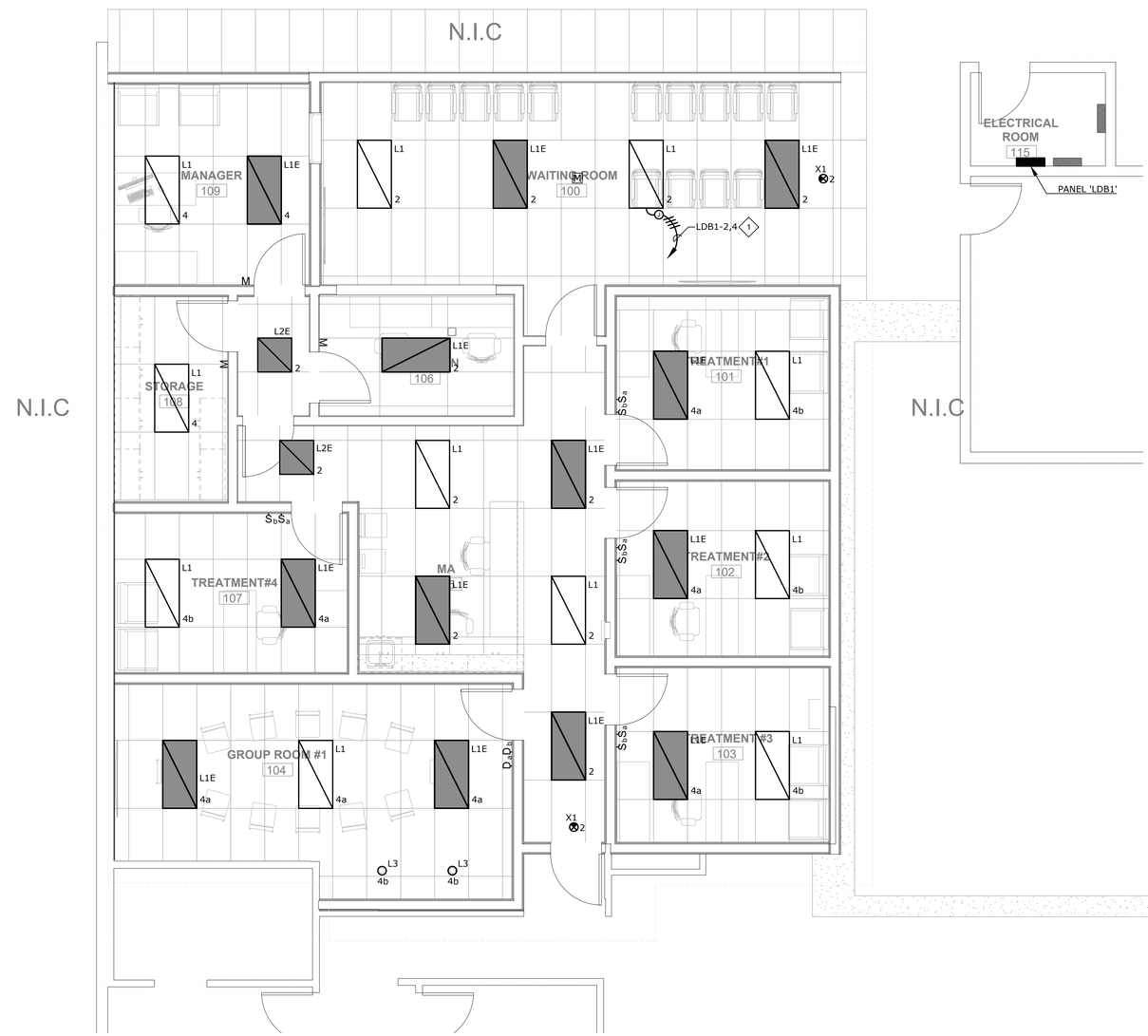

A
E300
LIGHTING PLAN
1/4" = 1'-0"

0' 1' 2' 4' 8'

NORTH

IMEG
370 E. WINDMILL LANE
SUITE 100, LAS VEGAS, NV
89123
PH: 702.896.1100
www.imegcorp.com
IMEG #23002690.00

PROFESSIONAL ENGINEER - STATE OF NEVADA
DAVID MEADOR
EXP: 12/31/2023
ELECTRICAL
No. 010319

JULY 31 2023

IZ design studio
design...sustainability...architecture.
tel. 702.441.0026
Fax. 702.475.4755
www.izdesignstudio.com
7229 W. Sahara Ave Suite 100
Las Vegas, NV 89117
Nevada

LIGHTING PLAN
SNHD
SNHD BEHAVIORAL HEALTH 2
278 S. DECATUR BLVD
LAS VEGAS, NV 89107

DELTA NO.	REVISION NO.	DESCRIPTION	DATE

Sheet Name
Project Name

Project Number	21479
Date	06.16.2023
Drawn By	IMEG
Checked By	PE

E300